Project Work Plan
for the
Palos Verdes Pilot Capping Project:
Interim and Post-Cap Monitoring
Volume II – Standard Operating Procedures

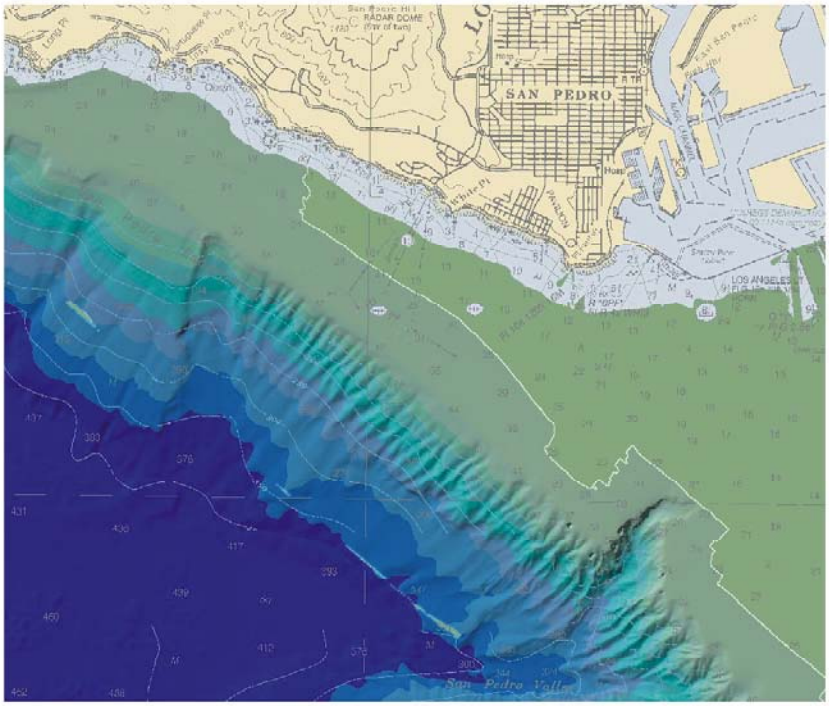

Prepared for:

U.S. Army Corps of Engineers
Los Angeles District
Environmental Construction Branch

U.S. Environmental Protection Agency
Region IX
Superfund Division (SFD-7-1)

Revision 01

July 2000

Prepared by:

Science Applications International Corporation
Admiral's Gate
221 Third Street
Newport, RI 02840
SAIC Report Number 504

Project Work Plan
for the
Palos Verdes Pilot Capping Project:
Interim and Post-Cap Monitoring
Volume II—Standard Operating Procedures

Prepared for:

U.S. Army Corps of Engineers
Los Angeles District
Environmental Construction Branch

U.S. Environmental Protection Agency
Region IX
Superfund Division (SFD-7-1)

July 2000

Revision 01

Prepared by:

Science Applications International Corporation
Admiral's Gate
221 Third Street
Newport, RI 02840
SAIC Report Number 504

Project Work Plan Approvals

Fred Schauffler, EPA Project Officer	Date
Vance S. Fong, EPA Project QA Officer	Date
Ellie Nevarez, Corps of Engineers Project Manager	Date
Mamie Brouwer, Corps of Engineers Project QA Officer	Date
Scott McDowell, SAIC Project Manager	Date

CONTENTS

Standard Operating Procedures for Field Data Collection Activities

Standard Operating Procedures for Laboratory Processing of Samples

FIELD SOPs

Standard Operating Procedure (SOP)
For
Hopper Dredge Positioning and Draft Measurements
Utilizing the Automated Disposal Surveillance System

Revision 01
July 24, 2000

Prepared by: Steve Pace Date: June 16, 2000
ADISS Engineer

Reviewed by: Ted Turk Date: June 23, 2000
Senior Scientist

Approved by: Ray Valente Date: June 26, 2000
Project Quality Assurance Officer

Science Applications International Corporation
221 Third Street
Newport, RI 02840

Table of Contents

1.0 Scope and Applicability

This SOP describes the method for determining the time and location of loading and dumping of a hopper dredge. Position data will be acquired during the transit and placement operations at the test sites. Draft and pump out information will be acquired with the position data to identify where sediment collection and placement occurs.

2.0 Summary of Method

The Automated Disposal Surveillance System (ADISS) will be installed on the hopper dredge, *Sugar Island*, and maintained throughout the project to acquire vessel position and draft and pump information during the loading, transit and placement operations. The ADISS system will acquire position/draft/pump information during the loading process, and at ten-minute intervals during the transit to the target cell. The rate of data acquisition will be automatically increased to six-seconds as the dredge nears the target. ADISS will receive the Differential correction signals for GPS provided by the U.S. Coast Guard. ADISS will record changes in vessel draft from a pressure sensor, installed in the aft ram well, and pump activities using a switch. Together, the draft measurements and the pump information will be used to determine when the vessel is loading or emptying.

The ADISSPlay helmsman display will be installed on the *Sugar Island* to display the vessel draft, and to record ADISS and compass information. ADISSPlay will receive position information from ADISS, and display the vessel's location relative to the target cell over a chart of the area. The orientation of the dredge during placement activities will be determined from bearing information received from the vessel's gyro compass. During the transit to the target, the displays of vessel track line or draft plot can be toggled as desired by the operator. ADISS data will be automatically stored within the ADISSPlay database, which will be exported to DAN-LA for display and analysis. Other information stored in the database, and entered through the ADISSPlay interface includes:

- Project, vessel and target identifications (pull-down entries)
- Volume of material loaded in the hopper (key-board entry)
- Type of operation, either drag-arm or split-hull (pull-down entry)

Services will include either daily or weekly data transfer as required from ADISS and ADISSPlay. The ADISSPlay database will be compared with the data processed from the ADISS records before it is submitted to DAN-LA for updating. Once recovered from the *Sugar Island,* the ADISSPlay database and the ADISS data files will be compressed and e-mailed to the ADISS Technician by on-site personnel. The ADISSPlay data will be processed using ADISSPro, and compared with the information in the ADISS data files before submittal to DAN-LA. Database contents will include the time and date of each vessel position and orientation, pump activity, vessel draft, load volume, and the identities for the target, vessel and project. Draft-time series and transit-placement events will be plotted and posted on the project web site.

3.0 Definitions

- ADISS: Automated Disposal Surveillance System
- ADISSPlay: The helmsman display of ADISS positions and draft information
- ADISSPro: The software used to process the ADISS and ADISSPlay data
- GPS: Global Positioning System
- DGPS: Differential corrections applied to the GPS data to increase accuracy to within 2-5 meters
- DAN-LA: Disposal Analysis Network-Los Angeles

4.0 Health and Safety Warnings

4.1 In General:

- The hardware for ADISS and ADISSPlay are electronic components, which reside in a small water and tamper-resistant, enclosure and a laptop computer, respectively. ADISS and ADISSPlay equipment will be installed in the wheelhouse of the hopper dredge. Both require 12-volt power converted from the 110-volt ship supply, and though no high voltages are present, due caution must be exercised when working around the electronics. Exchange of ADISS memory card and keyboard entries should be made with clean, dry hands.

4.2 Equipment:

- No life threatening voltages are present within the ADISS or ADISSPlay hardware.

4.3 Contaminant Exposure:

- Since none of the components contain chemicals or will be in contact with contaminants, no hazards exist.

5.0 Cautions

5.1 Equipment Damage

- Disconnect the power cable before removing the memory card from ADISS.
- The correct polarity must applied when powering ADISS or damage to the equipment will result.

6.0 Interference

6.1 GPS and DGPS Signals

Both GPS and DGPS signals are received by the ADISS antennas installed atop the hopper dredge wheelhouse. Only the GPS antenna must have an unobstructed view of the sky to receive signals from available satellites. Since the GPS antenna is small and portable, it can be easily relocated about the flying bridge of the dredge to meet the

needs for an unobstructed signal. The DGPS antenna receives its signal from the local U.S. Coast Guard facility and does not depend on an unobstructed pathway for operation. However, if the signal transmission from the primary station is interrupted, then the ADISS receiver will automatically switch frequencies to the next available station.

7.0 Personnel Qualifications

7.1 ADISS and ADISSPlay:

The Marine Technician operating the ADISS and ADISSPlay system is trained after two weeks in its operation by the ADISS Engineer and ADISS technician. Maintenance of the equipment and modification to the software are the responsibility of the ADISS Engineer and ADISS Technician. Monthly service visits to the hopper dredge are made by either. The Marine Technician is capable of operating the equipment and recovering the data from both ADISS and ADISSPlay memories. The ADISS Engineer directs the Marine Technician's efforts to trouble shoot the ADISS equipment and firmware, should the need arise, while the ADISS Technician guides the Marine Technician through potential problems with the ADISSPlay software.

8.0 Apparatus and Materials

8.1 ADISS Equipment:

- GPS and DGPS antennas and cabling (external)
- Submersible pressure sensor and cabling (external)
- Interface from the vessel's gyro compass
- GPS and DGPS receivers, data logger and memory storage (internal housing)

8.2 ADISSPlay Equipment:

- Lap top computer with ADISSPlay software
- Color printer to plot transits and placements tracks

9.0 Instrument or Method Calibration

9.1 GPS and DGPS Receivers:

Both the GPS and DGPS components receive signals transmitted from satellites and base stations, respectively. A comparison of position at a defined location with ADISS values will prove the accuracy of the system. The comparison will be made prior to installation on the hopper dredge at a known location within LA Harbor.

9.2 Pressure Sensor:

The factory calibration of the pressure sensor and spare sensor are checked prior to installation on the hopper dredge. In a laboratory test tank pressure values are noted against depth of sensor submersion at 1-foot intervals over a 0–12-foot range. The data for depth of submersion and pressure are correlated and used to convert raw pressure values recorded on the dredge to its draft. The conversion coefficient are stored within the processing software, ADISSPro, and within the ADISSPlay database to convert pressure counts to engineering units (feet).

9.3 Gyro Compass:

The dredge's gyro compass is maintained by the vessel's crew. The compass readout informs the operator of vessel orientation, which is compared with the ADISSPlay readout and recorded by the ADISSPlay system. The comparison of the direct reading from the dredge's gyro compass versus the reading being displayed and recorded by ADISSPlay is a check that will be performed weekly.

10.0 Sample Collection, Handling and Preservation

10.1 ADISS Data Acquisition:

Position, draft and pump information is stored in the ADISS portable flash memory card. Pressure and pump data is appended to the position data acquired by the GPS and DGPS receivers and stored in ASCI-II file format. Each line of data is time and date-stamped at six-second intervals and stored as it is received. Data is recorded for load events, and transits/placements to/at the target cells are stored in separate files. Load and transit/placement files are composed of Latitude-Longitude position, pressure values and pump on-off information. Information indicating the quality of the position fix is also included in each line, i.e., the number of satellites detected and the reception of the Differential GPS signal. The load data are gathered at six-second intervals for a two-hour duration. The transit data are acquired at ten-minute intervals until the dredge is within a half mile of the target cell boundary, when the interval should increase to six seconds. The placement event is recorded for 20 to 120 minutes, depending on the mode of disposal. A single point, split hull placement should require less time than the motile dispersion of sediments employing the pump out method through the drag arm. By exercising a variety ADISS firmware options, sampling parameters can be changed as required.

The sequence of ADISS set up operations includes:

1) Connect the terminal output to the laptop “COM 1”, and apply 12-volt power to ADISS.
2) Using HYPERTERMINAL and the ADISS instructions, adjust sampling thresholds as needed.
3) Test the unit by placing it in the “ID” mode, and observe the readout for correct operation.
4) Reset the unit, and place into the “GO” mode for operation.
5) To indicate pump operation, depress the switch to illuminate the blue lamp in the ADISS window.
6) Depress the switch again to extinguish the lamp, and indicate the pump is not engaged.

7) To download data, remove the card, and load files into the ADISSPlay laptop using ADISSPro.

10.2 ADISSPlay Data Acquisition:

The ADISSPlay laptop computer receives the position, draft, pump, time and date information sent from ADISS and the vessel bearing information from the flux-gate compass, and stores it to the database for each loading, transit and placement event. The database also contains the project, target and vessel identifications, and the volumes loaded for each trip. This information is entered by keyboard along with the type of placement, i.e., split-hull disposal or pump-out through the drag arm. To initiate acquisition:

1. Follow the instructions for initiating ADISS/ADISSPlay in Section 10.1.
2. Exit HYPERTERMINAL, and initiate the ADISSPlay program.
3. Using the "Tab" key, enter or pull down the correct information for:
   - Project Identification
   - Target Identification
   - Vessel Identification
   - Trip Identification
   - Type of placement operation
   - Volume of material loaded
4. Using the mouse, depress the "Start" icon on the tool bar.
5. To stop logging to the database, depress the "Stop" icon.
6. To exit the ADISSPlay program, chose "exit" from the "File" pull-down menu

10.3 Data Transfer and Chain of Custody (COC):

At the initiation of the program, both the ADISS data and the ADISSPlay database are transferred via e-mail to the ADISS Technician for processing and quality assurance. Once the processing becomes routine, it is conducted by the Marine Technician with oversight from the ADISS Technician. Ensuring the proper completion of the COC is the responsibility of the Marine Technician for each day of ADISS operations. COC forms accompany the electronic records that are transferred to shore at the end of the day's field operations. A duplicate copy of the completed COC form are submitted to the SAIC Project Manager for entry to the project archive. A detailed discussion of the project COC requirements can be found in the Quality Assurance Project Plan (QAPP). In brief, the COC form contains the following information:

- Date and time of ADISS and ADISSPlay downloads
- Name of Marine Technician performing download (signature space provided)
- Date and time of data e-mail transfer to ADISS Technician

- Name of ADISS Technician performing data processing (signature space provided)
- Date and time of data product transfer to Data Manager
- Name of Data Manager importing data to Web Site and DAN-LA (signature space provided)

11.0 Sample Preparation and Analysis

Once the ADISS and ADISSPlay data are downloaded from the dredge installation, they are e-mailed to the ADISS Technician for processing and quality assurance. Processing will be performed as described in Section 13.0.

12.0 Trouble Shooting

12.1 ADISS:

Trouble shooting the equipment are the responsibility of the Marine Technician with guidance provided by either the ADISS Engineer or Technician. Most problems can be remedied by re-setting ADISS:

- Detach the 12-volt power lead for at least 5 seconds
- Re-attach the 12-volt power and allow ADISS to automatically resume operation

If the ADISS unit has failed, then it is replaced with the spare unit, which will be kept onboard the dredge. To replace a failed ADISS unit:

- Detach the power lead, both the GPS and DGPS antenna cables and the RS-232 terminal connection to the ADISSPlay laptop computer.
- Re-attach the same to the replacement ADISS, and set sampling parameters as described in 10.1
- Set ADISS into the “GO” mode of operation.

12.2 ADISSPlay:

Trouble shooting the software and hardware is the responsibility of the Marine Technician with guidance provided by the ADISS Technician. The Marine Technician is trained to diagnose common data acquisition and processing problems, and solve them with assistance from the ADISS Technician.

13.0 Data Acquisition, Calculations and Data Reduction:

13.1 Data Acquisition:

ADISS:

As described in Section 10, ADISS records position data from both the GPS and DGPS receivers along with pressure and pump data in ASCI-II format. Each data string is recorded in separate files for loading and transit/placement events on a portable flash memory card. At the end of each day's operation, the card can be removed and the data files downloaded for e-mail transfer to the ADISS Technician for processing. Alternately, the Marine Technician can process the data with guidance from the ADISS Technician.

ADISSPlay:

As described in Section 10.2, ADISSPlay automatically records the data from ADISS and the gyro compass into its database for each loading, transit and placement event. The database contains the project, target and vessel identifications, and volumes loaded for each trip and type of placement, which are entered by keyboard.

13.2 Calculations:

The calculation of raw data to engineering units is limited to the vessel draft information. The position information is recorded in the form it is received from the GPS receiver, decimal degrees of Latitude and Longitude. The pump operation is signified by an "on" or "off" switch setting, and the compass bearing is recorded in degrees (0-360). The conversion of pressure values to draft information occurs during the processing of the stored ADISS data, and automatically within the ADISSPlay database. ADISSPro and the ADISSPlay database use the equation describing the relationship of pressure vs. depth, established in Section 9, to convert pressure counts to draft measurements.

13.3 Data Reduction:

Data reduction takes place during the processing of the ADISS and ADISSPlay data within ADISSPro. The beginning and ending position of each disposal event is selected in a time-vs.-draft plot by the Technician according to changes in draft and pump activity. Once the database is updated with the selection of the placement points, the track line is plotted over the background of the target cell. The ADISSPlay points are checked with those from ADISS before the images of the plots are exported to DAN-LA and the Web Site for display.

14.0 Computer Hardware and Software

14.1 Hardware:

The hardware for the ADISS and ADISSPlay equipment is listed in Section 9.

14.2 Software:

Control of the logger is contained within the ADISS firmware. A complete description of the firmware and logic sequence is described within SAIC, 1998.

ADISSPro software is used to process the ADISS and ADISSPlay data as described in Section 13.3.

Acquisition and storage of ADISS data also takes place within the ADISSPlay software as described in Section 10.2. Display of vessel position, bearing and draft are functions of ADISSPlay. The vessel track view contains manual zoom and pan, as well as automatic zoom features. ADISSPlay software is described in SAIC, 1999.

15.0 Data Management and Records Management:

15.1 Electronic Data:

All electronic files from ADISS and ADISSPlay data will be archived within the Palos Verdes database. The archiving function will be the responsibility of the Database Manager.

Data Management and Security

The SAIC Project Manager will be responsible for security of all electronic records and project data/information acquired during ADISS and ADISSPlay operations. Records will be maintained in a secure storage facility at SAIC's Newport, Rhode Island, office. Additionally, back-up copies of all digital data will be stored on magnetic medium in an appropriate storage area. Processed data will be maintained in the project Geographic Information System (Disposal Analysis Network -Los Angeles, or DAN-LA), and frequent (i.e., daily) backups of the DAN-LA data archive will be part of the routine procedure for maintenance of the DAN-LA system.

16.0 Quality Assurance/Quality Control (QA/QC)

16.1 ADISS/ADISSPlay:

Processed data from ADISS will be used to check the data acquired in the ADISSPlay database. A comparison will be made between the processed data from both sources before it is exported to DAN-LA and the Web Site for display. Other QC checks will include the determination of the quality of the Differential and GPS satellite position fixes, using the information recorded in the data strings, as well as the raw pressure counts of vessel draft and the compass bearing information. Observations will be noted in the posting of the data plots of position, should the quality of the data be compromised or in question.

17.0 Checklists

The following procedural checklist is used for ADISS:

1. If downloading, disconnect the battery at the 2-pin connector (H2).
2. In either case (installation or download), attach the RS-232 cable to computer and 3-pin terminal connector (H4).
3. If download, remove the flash memory card by pushing on ejector tab.
4. Install a new flash memory card so that the end of the ejection tab is even with the edge of the card.
5. Run HYPERTERMINAL on the laptop computer. Setting should be 9600-8-N-1.
6. Connect the 12-volt lead to the 2-pin connector (H2).
7. Display message reads, "DGPS Data Logger Version 12 05 99" and " Press any key or default mission will start 30 sec".
8. Press any key within 30 seconds and a "+" will appear.
9. Press "?" and the Help file menu will appear.
10. Set Caps Lock, and select the following items on the menu by typing the letter indicated.
11. If installing a pressure sensor, connect it and select "T" to test. Wait a few seconds for the data to appear.
12. Short the reset (H1), and hit any key within 30 seconds to end test.
13. Attach both the DGPS and the GPS antennas to the system.
14. Type "ID" to test sensors and send data to the memory card and computer display.
15. Short the reset (H1), and hit any key within 30 seconds.
16. <u>When all tests are complete, enter setup data by completing the following</u>:
17. Enter the header information for the installation by typing "U" followed by the character string, then <CR>.
18. Suspend the pressure housing at the half-full position and select "P" to determine the full barge pressure count.
19. Select "F" and enter the three-digit pressure count observed above, then <CR>.
20. After installing the pressure sensor in the brackets, type "P" to determine the empty barge pressure count.
21. Select "E" and enter the three-digit pressure count observed above, then <CR>.
22. Select "M" and enter the first or northern Latitude in decimal degrees, then <CR> (40345 = 40.345 ^{o} for Ambrose Lt)
23. Select "W1" and enter the first Latitude sampling rate in 6-sec intervals, then <CR> (W105 = 30 sec). Max is 5 min.
24. Select "N" and enter the second Latitude in decimal degrees, then <CR> (40567 = 40.567 ^{o} for Northern MDS boundary)
25. Select "W2" and enter the second Latitude sampling rate in 6-sec intervals, then <CR> (W201 = 6 sec). Max is 5 min.
26. Select "W3" and enter the pressure sensor checking rate in 6-sec intervals, then <CR> (W3200 = 20 min). Max is 20 min.
27. Select "W4" and enter the after-disposal record duration in 6-sec intervals, then <CR> (W4100 = 10 min). Max is 20 min.
28. Display the parameter list by typing "L", and check all entries.
29. Correct entries as needed and re-check by typing "L".
30. Type "I?" to print out the immediate test menu.
31. Type "I1" to test the red LED (blinks once, no <CR>).
32. Type "I2" to test the yellow LED (blinks once, no <CR>).
33. Type "I3" to test the green LED (blinks once, no <CR>).
34. Type "IE" to view in binary the parameters and the first recorded data string.
35. Type "G" to begin the logging sequence of data.

18.0 References

SAIC. 1998. New York Disposal Surveillance System: Prototype Description. Report #72 of the New York Mud Dump Site Studies. USACE-WES, BAA Contract, Task 2.2.1 SAIC Report No. 421.

SAIC. 1999. Automated Surveillance of Disposal Operations During the 1999 Passenger Ship Terminal Project at the HARS. Report #84 of the New York Mud Dump Site Studies. USACE-CENAN, Contract DACW51-97-D-0014. SAIC Report No. 471.

Standard Operating Procedure (SOP)
For
Collection of Sediment Core Samples

Revision 01
July 24, 2000

Prepared by: Victoria Frank/Pamela Walter Date: June 16, 2000
Environmental Scientist/Marine Staff Scientist

Reviewed by: Ted Turk Date: June 23, 2000
Senior Scientist

Approved by: Ray Valente Date: June 26, 2000
Project Quality Assurance Officer

Science Applications International Corporation
221 Third Street
Newport, RI 02840

Table of Contents

1.0 Scope and Applicability

This Standard Operating Procedure (SOP) describes duties and responsibilities for collection of sediment core samples. Sediment coring is a sediment collection method that yields deep cross-sections of sediment to facilitate physical and/or chemical characterization. Sediment coring and subsequent sample analysis are important survey and monitoring techniques used to monitor and manage the deposition of dredged material at disposal areas. Sediment coring has been used to characterize sediments and assess potential contaminants prior to dredging. It has also been critical in evaluating layers of disposed dredged material for a variety of capping projects.

2.0 Summary of Method

Sediment cores are collected from a suitable vessel using a gravity corer (or other coring device). The corer collects a portion of the seafloor sediments extending from the sediment-water interface to the depth of maximum corer penetration. The core barrel contains a removable core liner that can be capped on both ends to protect the integrity of the core and serves as the initial sample storage container. Upon collection, the cores are labeled and stored upright on wet ice and in the dark. At the completion of the survey day, samples are taken to the shore-based laboratory.

3.0 Definitions

Gravity Core (Figure 3-1) – a sampling device consisting of a long aluminum or steel core barrel, having an outside diameter of 4-in, attached to a weight stand (core head). The weight stand is constructed of heavy-gauge steel and is designed to accommodate varying amounts of weight. Individual lead weights approximately 50 lbs. each, slip over a center spindle and can be adjusted for varying sediment types and consolidation characteristics. The weight stand is designed to accommodate a maximum of 800 to 900 lbs. Additionally, the weight stand is equipped with a check valve, at the top of the spindle and in line with the core barrel, to allow water to pass freely through the aperture on descent through the water column and prevent sample washout on the ascent to the surface. There are four “fins” at the top of the weight stand to minimize rotation on descent. The entire device is manipulated by either a crane or winch and an A-Frame via a lifting bail on top of the weight stand. The core cutter is the sharp nose or edge of the corer that first penetrates the sediment and holds the core liner and core catcher in place.

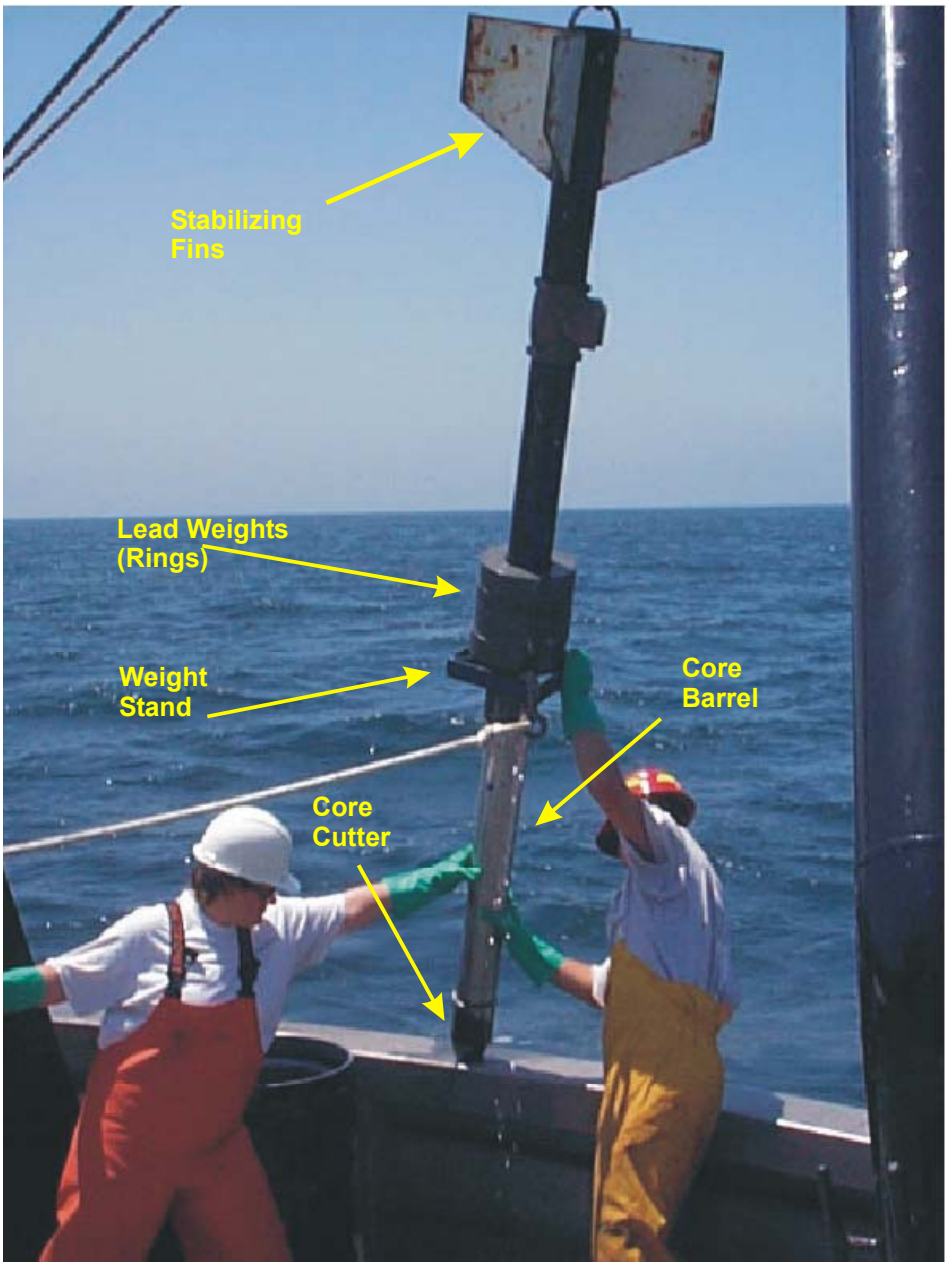

Figure 3-1. Photograph of Gravity Corer being retrieved following sample collection.

4.0 Health and Safety Warnings

4.1 Hazards Encountered During Sampling

Hazards encountered during sampling are generally classified as either physical or chemical. Physical hazards are associated with sampling gear, vessel, processing area hazards and work conditions over water. Chemical hazards may include: 1) contaminants or hazardous materials potentially present within the sediments sampled or 2) chemicals and/or cleaning agents used during sampling or decontamination procedures. Appropriate levels of personal protection and decontamination procedures must be followed

Sediment corers are potentially dangerous pieces of equipment. All personnel should wear hard hats and steel-toed boots and a certified PFD when working on the vessel with the gravity corer. Personnel shall avoid standing directly beneath the winch wire or in the bight of any taut cables or ropes. The operators must be careful not to place hands or fingers in a position where they could be injured. The corer is a heavy piece of equipment (especially when full). The operators must take care when deploying or retrieving this gear under adverse weather conditions. Safety lines are recommended during adverse weather conditions.

4.2 Physical hazards associated with fieldwork include:

- Slips, trips, and falls. Deck gear and equipment, sample handling equipment, containers, and deck lines not in immediate use will be kept clear of work areas until needed
- Electrical/mechanical equipment. All personnel will be instructed in the proper use of electrical and mechanical equipment prior to using the equipment. All electrical equipment will be properly grounded.
- Heavy lifting. Personnel will not attempt to lift heavy equipment and samples without assistance.

4.3 Exposure to chemical hazards.

Inhalation

Inhalation is breathing in fumes or vapors. In the field, inhalation is not a major concern because the sampling process is conducted on the deck of the boat with an ample supply of fresh air, use caution when using solvent for decontamination procedures. Inhalation does pose a larger threat in confined areas.

Absorption is the intake of chemical though the skin. To avoid absorption, all crew members shall wear appropriate protection. Due to the nature of the sampling process, the crew members should already be wearing a minimum of a

rain suit and steel-toed rubber boots. Gloves providing adequate protection and eye protection should be worn at all times when handling sediment.

Ingestion is the intake of chemicals through the mouth. Ingestion can be a problem from splashing of contaminated water associated with the sampling process. Actions should be taken to minimize the amount of splash during sampling.

Contamination:

When dealing with sediment appropriate Personal Protection Equipment must be worn, including gloves, eye protection and Tyvek or foul weather gear to prevent clothing from contamination. The project Health and Safety Plan (included in Volume I of the Project Work Plan for the Interim and Post-cap Monitoring) provides details on the level of protection needed for the project.

Decontamination:

Chemicals used for cleaning and decontamination procedures may include: Alconox® (a non-phosphate detergent) diluted nitric acid, and methanol or acetone. Dilute nitric acid, methanol, and acetone are eye and skin irritants. Flush with water immediately upon contact. Nitric acid is also corrosive to metals, so rinse completely after decontaminating supplies. Safety precautions should be taken when using these chemicals. Chemicals are shipped with a specific Material Safety Data Sheet, which provides safety guidelines and handling precautions.

5.0 Cautions

Sunny weather conditions require consumption of adequate volumes of liquid to avoid heat stroke, especially if Tyvek or heavy PPE is being worn. As with the operation of any heavy equipment caution must be taken to avoid getting hands, feet, hair or other body parts caught in moving lines and cables.

6.0 Interferences

Interruptions to the anticipated progress of the survey schedule (e.g., inclement weather, mechanical difficulties, etc.) will be reported immediately to the SAIC Project Manager. The Project Manager will be responsible for documenting the delay in the activity log.

7.0 Personnel Qualifications

All personnel working in the exclusion zones (aft deck of vessel during sample collection will be OSHA 40-hour certified (HAZWOPER). Documentation of certification and medical monitoring clearance are maintained on-site. Non-OSHA trained personnel are to assist in assigned support tasks not directly involved in handling or interfacing with sediments. All personnel are familiar with basic marine sediment collection techniques, minimizing potential for sample contamination, chain of custody documentation and transfer of samples, project documentation, QA/QC requirements, and health and safety issues.

8.0 Apparatus and Materials

8.1 Equipment

- Gravity coring device with weight stand
- Spare core cutters, catchers and weights
- Clean core liners and end caps
- PC laptop computer for Navigation with a DGPS reciever
- Surge protector
- Equipment Manuals
- Hacksaw and spare blades
- Tool box

8.2 Supplies

- Buckets, brushes, hoses and appropriate materials for cleaning exclusion zone and decontamination of liners and catchers as required by the Field Sampling Plan
- Clear tape, duct tape and electrical tape for securing end caps and labels
- Permanent markers for labeling
- Refrigeration unit or ice filled cooler to maintain 4-8 degree Celceus sample temperature and prevent photodegradation of samples
- Spare line for stabilizing corer
- Appropriate PPE as specified in the Health and Safety Plan, including but not limited to hard hats, steel toe boots, eye protection, gloves and Type I personal floatation device (PFD)
- Field log to record field data (e.g., sample date, time, location, size, comments)

9.0 Instrument or Method Calibration

The weight stack applied to the gravity core unit is adjusted for the sediment type and desired penetration level by adding additional weight for deeper penetration and the removal of weight in overpenetration is occurring.

10.0 Sample Collection, Handling and Preservation

10.1 Sample Collection

Preparation

The core cutter and catcher is prepared using a mild soap and water wash, followed by tap water, ASTM Type II water, methanol and hexane rinses. For each core, a 3.5-in inside diameter butyrate core liner will be inserted into the core barrel. The catcher is inserted into the liner and both the catcher and liner are retained mechanically by the steel core cutter that is attached at the end of the core barrel to facilitate impact with the seafloor. The core barrel is inserted into a collar using clamps on the lower side of the weight stand and the core cutter screwed into place. A supply of decontaminated core liners will be pre-cut to accommodate desired core lengths. Core liners are dedicated, one-time use items. The gravity corer is then sent down to collect the sample as described below.

Collection

Horizontal positioning of the survey vessel to the target station location will use the DGPS navigation system described in Section 3.2. When the survey vessel is positioned on station, the gravity corer, tethered by wire rope from a winch, will be lowered to the seafloor. The vessel aligns itself above the target location such that current and wind set are accounted for, allowing the vessel to slowly drift onto station location. During this slow drift the gravity corer is suspended approximately 10-20 meters above the seafloor. Once the winch line is vertical, the captain of the vessel is notified and the vessel is at the target location, the corer is permitted to free-fall to seafloor. An ongoing dialog between the captain of the vessel and the deck crew is a necessity. During the free-fall of the gravity corer, the deck crew must maintain that the winch wire is vertical, and the navigator must ensure that the vessel is within the specified 5-m watch circle. Corer impact with the seafloor will be apparent from a sudden decrease in tension of the winch wire. During gravity coring of the baseline survey there were no difficulties detecting the core's impact with the bottom. Vessel position is logged at the time the sampler impacts the bottom. If the vessel is outside the watch circle, the vessel will be repositioned, and another core sample will be collected.

Weight Adjustments

The actual depth of sediment inside the core liner (sample recovered) may be less than the core barrel's penetration into the bottom sediment, depending on the degree of sediment compaction during penetration, and any potential loss of sample out of the bottom of the core liner (past the core catcher). In unconsolidated fine-grained sediments, typical sample recoveries using gravity corers range from 75 to 85 percent of the penetration depth. If the bottom sediments are composed of coarser-grained materials, there is typically less compaction, but core penetration is usually shallower due to difficulty in penetration in harder substrate. In such cases where insufficient core penetration is encountered, more weight will be added to the weight stand of the corer and another core attempt will be made at that station.

Recovery

Upon recovery, the corer is held in a horizontal position, the core cutter and catcher is removed from the lower end of the core barrel, a core cap is placed on the end of the liner and secured in place, then the core liner is removed from the barrel. The core liner is held vertically and a small hole is drilled into the core liner about 1 cm above the sediment-water interface to allow any water that may be trapped above the sediment sample to be removed. If this interface is not immediately visible, then the core liner is held vertically until all suspended sediment has settled and the interface is apparent. A core cap is placed on the top of the corer liner, and the liner is labeled with the station number, core replicate, and core top/bottom indicators. The caps are taped with electrical tape to ensure a tight seal. The sample is measured to assure ample material in accordance with the Field Sampling Plan and recorded in the field log. The core is placed upright (vertical) in a dark place to avoid sample photodegradation and kept at 4-8 degrees Celsius until processed. The cores are also measured a second time, after the samples have had a chance to settle in the liners.

Field Survey Processing

All cores are returned to the shore-based laboratory. Excess sediment is returned to the laboratory for appropriate disposal; none of the sediment is disposed in the ocean.

Information about sample collection, date and time, sampling personnel, deviations from established protocols or sampling and other pertinent information are recorded in the Field Sampling Log.

11.0 Sample Preparation and Analysis

Core samples are logged into the internal sampling tracking system upon delivery. Sediment cores are stored in the dark on wet ice (approximately 4° C) at SCMI until processed. See the S.O.P for core processing and analysis.

12.0 Trouble Shooting

Extra sample core liners and lids will be provided in case of breakage or loss. Extra parts for the gravity corer are also kept on-board. Interruptions to the anticipated progress of the survey schedule (e.g., inclement weather, mechanical difficulties, etc.) will be documented by the SAIC Project Manager, or his designee.

13.0 Data Acquisition and, Calculations and Data Reduction

This section is not applicable to this Standard Operating Procedure.

14.0 Computer Hardware and Software

This section is not applicable to this Standard Operating Procedure.

15.0 Data Management and Records Management

Navigation logs and survey parameters are stored digitally. Graphics of survey position are created by SAIC personnel and submitted with cruise report data. All navigation logs are archived into the project database for later use in analysis.

16.0 Quality Assurance/Quality Control (QA/QC)

- Follow Field Sampling Plan
- Follow S.O.P. for core activities
- Make sure all sample meet QA/QC described in the project specific Field Sampling Plan

17.0 Checklists

This section is not applicable to this Standard Operating Procedure.

18.0 References

SAIC. 2000. Project Work Plan for the Palos Verdes Capping Project.

Standard Operating Procedure (SOP)
for
In-Hopper (Barge) Sediment Sampling

Revision 03
August 10, 2000

Prepared by: Victoria Frank/ Pamela Walter Date: August 10, 2000
Environmental Scientist

Approved by: Ray Valente Date: October 20, 2000
Project Quality Assurance Officer

Science Applications International Corporation
221 Third Street
Newport, RI 02840

Table of Contents

1.0 Scope and Applicability

This Standard Operating Procedure (SOP) describes duties and responsibilities for sampling dredged sediments from a barge hopper. The dredge operators are responsible for collecting the samples. SAIC personnel are responsible for providing pre-labeled sample containers, instructions to the dredging contractor for sample collection, sample custody, and transportation of the samples for laboratory analysis of geotechnical and chemical properties.

The data quality objective is collection of representative samples for subsequent laboratory analyses of geotechnical and chemical properties of the dredged materials. The information can be used to predict (model) the behavior and fate of materials released at a dredged material disposal site.

2.0 Summary of Method

The dredging contractor will be responsible for collection of sediment samples from the hopper. SAIC will provide the dredging contractor with complete, detailed instructions for sample collection, preservation, and associated documentation. For each load, three samples will be collected (one each from bow, center and stern of hopper). Each sample will be placed in a stainless steel container that will be provided fully decontaminated by SAIC. The samples will be collected using a small metal hand held grab sampler that will be rinsed with fresh water between each sample location (i.e. bow, center and stern). The samples will be placed in the stainless steel sample container, secured and stored in a cooler with wet ice. Custody of the samples will be transferred to SAIC personnel at the end of each day. The three samples will then be combined and homogenized to create a single composite sediment sample by SAIC personnel in the SCMI field laboratory. All subsampling devices (spoons, mixing bowls, etc.) will be fully decontaminated before each use. Subsamples of the composite will then be obtained for geotechnical and p,p'-DDE analyses.

3.0 Definitions

Barge hopper – the portion of the barge or hopper dredge used to store dredged sediment during transport to an aquatic disposal site.

Sediment subsample – sediment that has been collected in an appropriate sample container for laboratory analysis.

4.0 Health and Safety Warnings

The primary physical hazards are associated with the heavy equipment used and unstable platform on-board the hopper dredge. Survey personnel should exercise common sense in working around this equipment. The crew shall assist each other and other personnel when moving or off-loading heavy sample coolers.

5.0 Cautions

Sunny weather conditions require use of sunscreen and consumption of adequate volumes of liquid to avoid sunburn and heat stroke. Use of a hat and sunglasses is also suggested. Raingear should be used in event of foul weather.

6.0 Interferences

Interruptions to the anticipated progress of the survey schedule (e.g., inclement weather, mechanical difficulties, etc.) will be reported immediately to the SAIC Project Manager. The Project Manager will be responsible for documenting the delay in the activity log.

7.0 Personnel Qualifications

Personnel collecting samples from the hopper should be familiar with this SOP and techniques for collecting samples while minimizing potential for sample contamination.

8.0 Apparatus and Materials

The following materials and equipment are needed to complete the task:

- Pre-labeled stainless steel containers (see Figure 1)
- Resealable bags (one gallon size, freezer type)
- Grab sampling device (handheld metal grab sampler on rope, provided by dredging company)
- Wet ice (for sample preservation and storage)
- Coolers (for sample preservation and storage)
- Duct tape for sealing stainless sampling containers and cooler
- Chain of custody forms

Figure 1. The stainless steel sampling container used by NATCO to collect hopper dredge samples (left). The containers are held together by duct tape when transported to the hopper dredge, the tape is not see in this photograph. After the bow sample is collected and the containers are duct taped together (above) the center sample would be collected at this point and the 'lid' and 'stern' sample containers would remain duct taped together until after the center station is collected.

9.0 Instrument or Method Calibration

Not applicable.

10.0 Sample Collection, Handling and Preservation

Samples of sediment (cap material) from the hopper are collected using a hand held grab sampling device. A NATCO crew member on the hopper dredge will be responsible for obtaining the sediment samples and placing them into the appropriate stainless steel sample containers (supplied by SAIC). Procedures are described as follows: three sediment samples are taken, one each from the bow, center, and stern sections of the hopper. Samples will be taken as close to the centerline of the vessel as possible, and bow and stern samples should be taken approximately 5-10 meters from the bulkhead (the walkway on the dredge only allows for approximately 1.5 meters from the sidewall). Exact station locations are marked on the hopper with tape on the walkway railing). The samples taken from the three locations will be placed into individual containers appropriately labeled for each sample. NATCO will transfer custody of the samples to SAIC personnel. At the SAIC field laboratory a single container (i.e., a precleaned stainless steel mixing bowl) will be used to homogenize equal portions of sample from each of the three sample locations, thereby creating a composite sample. This homogenized composite sample will then be sub-sampled as described below. Nothing but precleaned stainless steel sampling containers and implements will touch the sample.

For geotechnical analysis the sample containers will be cleaned with a mild soap and water wash, rinsed with tap water followed by ASTM type II water before each sampling event. After the subsample is collected in the laboratory it is placed in a one-gallon resealable bag, providing approximately 2 pints of material for laboratory analysis.

For p,p'-DDE analysis decontamination of the sampling equipment will consist of a mild soap and water wash, followed by tap water, ASTM type II water, methanol, and hexane. All equipment coming in contact with the sediment sample will be stainless steel and appropriately

precleaned. For p,p'-DDE analysis, a 100-g aliquot of the composite will be placed into a clean, pre-labeled 250-ml glass jar.

Prior to any sampling, the individual on the dredge who is responsible for obtaining the samples will be given detailed instructions from SAIC on the sampling and sample container filling procedures along with a written standard operating procedure.

The samples are transferred to SAIC personnel on the same day, as soon as practicable following the placement event.

Sample labels will be completed prior to the survey, and will include the project name, sample location, and unique sample identification number. The labels are over-wrapped with two layers of clear tape so that the labels will not come off once exposed to moisture. Sediment samples will be delivered from the dredge to the SCMI laboratory by SAIC personnel. At the field laboratory either Vicky Frank or Pamela Walter will homogenize and subsample according to laboratory and parameter group.

11.0 Sample Preparation and Analysis

Samples will be collected as stated and transferred by SAIC personnel to the laboratory for designated analyses.

12.0 Trouble Shooting

Extra sample containers, blank labels and COCs will be provided in case of breakage or loss. The SAIC Project Manager will be notified of any problems during sample collection by barge personnel through transfer of samples to SAIC personnel. Interruptions to the anticipated progress of the survey schedule (e.g., inclement weather, mechanical difficulties, etc.) will be documented by the SAIC Project Manager or his designee.

13.0 Data Acquisition and, Calculations and Data Reduction

The only data to be collected by the dredging contractor is the date and time of collection for each sediment sample collected. This information can be recorded on the COC.

14.0 Computer Hardware and Software

Not applicable.

15.0 Data Management and Records Management

SAIC is responsible for receiving and maintaining the COCs for the samples collected.

16.0 Quality Assurance/Quality Control (QA/QC)

The COC will be reviewed by SAIC personnel receiving the collected samples from the dredging contractor. Any discrepancies will be noted on the COC and resolved by SAIC personnel. The COC will be signed by the SAIC personnel receiving the samples once it has been checked for accuracy and completeness. One field rinsate sample will be collected from the stainless steel container used for transporting the hopper samples. For this sample 2 liters of ASTM type II water will be placed in the container after decontamination and left for 4 hours (approximate time sediment will be in the container). The rinsate sample container will be duct taped together with a second container (as if it contained a hopper dredge sample) and repeatedly moved around the laboratory in order to jostle the sample, test for leakage from the container as well as exposure to the duct tape holding the containers together. The rinsate sample will be kept at 4° C and sent to the laboratory for p,p'-DDE analysis.

17.0 Checklists

The hopper dredge personnel collecting the sample will be given the following SOP before each sample collection.

Hopper Dredge Sampling

- Using the NATCO grab sampler, samples will be collected from the bow, centerline and stern of the hopper.
- Each grab sample will be placed in a stainless container labeled specifically for the bow sample, center sample and stern sample.
- DO NOT SET THE BOTTOM OF THE CONTAINERS MARKED STERN AND CENTER ON THE DECK.
- KEEP CONTAINERS STACKED AND TAPED UNLESS FILLING.
- START WITH BOW SAMPLE, FOLLOWED BY CENTERLINE AND THEN BY STERN.
- If one grab does not fill at least half of the stainless steel container another grab will be collected at the same location. (a stainless steel spoon provided by SAIC may be used to scrape material from the grab sampler into the container).
- The grab sampler and any spoons used will be rinsed with water between each of the three samples.
- SAIC will supply clean, fully decontaminated stainless sampling gear for each hopper collection.
- Samples will be collected from the walkway approximately 1.5 meters from the side of the hopper.
- Samples will be collected as close to centerline as possible and at least 5 meters from the bow and stern.
- SAIC will indicate where the samples are to be collected from with tape on the walkway rail.
- Sediments touching the bulkhead should not be included in the sample.
- Care should be taken by NATCO to keep the decontaminated sampling gear clean until used.
- The containers will be duct taped together after filling and kept on ice until SAIC personnel (Dave Fischman) receives the sample.
- Chain of custody (COC) forms will be completed by SAIC prior to sampling and signed by NATCO & Mr. Fischman at the transfer of the material.

- Mr. Fischman will transport the samples (still on ice) to the SAIC field lab located at SCMI on Terminal Island where Pamela Walter or Vicky Frank will receive the sample, sign the COC and take over responsibility for the sample.
- At the lab the sample will be homogenized and subsampled into the appropriate sample containers and sent to the appropriate laboratory for analysis along with the COC.

18.0 References

SAIC. 2000. Project Work Plan for the Palos Verdes Capping Project.

Standard Operating Procedure (SOP)
For
Sediment Core Processing

Revision 01
July 24, 2000

Prepared by: Pamela Walter — Date: June 16, 2000
Marine Staff Scientist

Reviewed by: Ted Turk — Date: June 23, 2000
Senior Scientist

Approved by: Ray Valente — Date: June 26, 2000
Project Quality Assurance Officer

Science Applications International Corporation
221 Third Street
Newport, RI 02840

Table of Contents

1.0 Scope and Applicability

This Standard Operating Procedure (SOP) describes methods and responsibilities for sediment core processing. Sediment coring is a sediment collection method that yields deep cross-sections of sediment to facilitate physical and/or chemical characterization. Sediment coring and sample analysis is important survey and monitoring techniques used to monitor and manage the deposition of dredged material at disposal areas. Sediment coring has been used to characterize sediments and assess potential contaminants prior to dredging. It has also been critical in evaluating layers of disposed dredged material for a variety of capping projects. To insure consistency and quality control in collection and sampling procedures, this report provide guidelines for sediment core processing.

2.0 Summary of Method

Sediment cores are collected using a gravity corer (or other coring device), stored vertically, in the dark at 4-8 degrees Celsius until processed. Processing cores involves splitting the core in half horizontally, photographing the core, conducting a visual analysis and general description of the core, and subsampling for designated chemical and or geotechnical analysis based on the project-specific Field Sampling Plan.

3.0 Definitions

Core Splitter (Figure 3-1)- the core splitter is a motorized unit that cuts the majority of the core liner, maintaining the integrity of the core and sample until the processing technician cuts the remainder of the liner with a decontaminated utility knife.

Figure 3-1. Photograph of core being split using the motorized Core Splitter.

4.0 Health and Safety Warnings

Physical hazards associated with processing include:

- Slips, trips, and falls. Unnecessary gear should not be stored in the processing area. Floors should be kept dry and clean of discarded sediments.
- Electrical/mechanical equipment. All personnel are instructed in the proper use of electrical and mechanical equipment prior to using the equipment. All electrical equipment will be properly grounded.
- Heavy lifting. Personnel will not attempt to lift heavy equipment and samples without assistance.
- Overheating. When working in an enclosed space with appropriate Personal Protection Equipment (PPE), overheating may occur, make sure personnel stay hydrated and have good air circulation.

Exposure to chemical hazards.

- Inhalation is breathing in fumes or vapors. Personnel will use caution when using solvents for decontamination procedures. Inhalation poses a threat in confined areas. Air monitors should be used at least in the initial processing phase to determine if organic gases are present in the sediments at high-risk levels. Take appropriate actions in accordance with the Health and Safety Plan for the project if organic gases are detected. Good air circulation is recommended when processing marine sediments; adding fans to the processing area can reduce and eliminate hazardous levels as well as aid in keeping the area cooler for technicians.
- Absorption is the intake of chemical though the skin. To avoid absorption, all crew members must wear appropriate protection. Gloves providing adequate protection from known contaminants and eye protection should be worn when handling sediment. Additional PPE in accordance with the Health and Safety Plan may be required depending on the level of contamination of the sediments.
- Ingestion is the intake of chemicals through the mouth. Ingestion can be a problem from splashing of contaminated water associated with the sampling process. Actions should be taken to minimize the amount of splash during sampling and decontamination procedures.
- Contamination of clothing: When dealing with contaminated sediment appropriate PPE must be worn, including gloves, eye protection and Tyvek to prevent contamination. The project Health and Safety Plan will detail the level of protection needed for the project.
- Decontamination: Chemicals used for cleaning and decontamination procedures may include: Alconox® (a non-phosphate detergent), ASTM Type II water, methanol and Hexane. Methanol and Hexane are eye and skin irritants. Flush with water immediately upon contact. Safety precautions should be taken when using any chemicals. Chemicals are shipped with a specific Material Safety Data Sheet, which provides safety guidelines and handling precautions.
- Splitting. Core splitting requires the use of a motorized cutting unit and knifes. When using the motorized unit hearing protection and leather gloves or comparable protection should be worn in addition to recommended PPE for the sediment type being analyzed. When using knives to split the remainder of the core, personnel must wear leather gloves or comparable protection and keep hands away from blades.

5.0 Cautions

As with the operation of any motorized cutting device, hands, fingers, hair and other body parts should be kept away from moving parts. When using knives, use extreme caution; avoid pulling knife towards body. Keep hands above and away from area being cut.

Maintain good air circulation to avoid overheating and exposure to organic gases.

6.0 Interferences

This section is not applicable to this Standard Operating Procedure.

7.0 Personnel Qualifications

Personnel working in the exclusion zone (processing area) will be OSHA 40-hour certified (HAZWOPER). Documentation of certification and medical monitoring clearance are maintained on-site. Non-OSHA trained personnel are to assist in assigned support tasks not directly involved in handling of sediments. All personnel are familiar with basic marine sediment collection techniques, minimizing potential for sample contamination, chain of custody documentation and transfer of samples, project documentation, QA/QC requirements, and health and safety issues.

8.0 Apparatus and Materials

Core Splitting

- Core splitting stand to stabilize core for cutting
- Motorized cutting unit with spare bits
- Eye, ear and hand protection in addition to required PPE (project specific; ex. Tyvek)

Photography (see Figure 8-1)

- Digital camera
- Camera stand
- Core cradle to stabilize core for photography
- Light stand
- PC and appropriate cables and software to download digital images
- Color guide for image adjustment
- Tape measure for scale

Figure 8-2. Photograph of the core photography station.

Sampling for Chemistry

- Sample jars as specified in Field Sampling Plan
- Stainless steal sampling spoons and bowls
- Sample labels, indelible marker, clear tape, custody seals and COC's for samples
- Decontamination materials and procedures from the Field Sampling Plan
- Bubble wrap and other packaging material for shipping samples to laboratory for analysis
- Coolers and ice to maintain sample temperature through shipping
- Appropriate shipping labels and placards for materials being shipped
- Log book

Sampling for Geotechnical

- S.O.P. for vane shear strength in required by Field Sampling Plan
- Stainless steal sampling spoons
- Resealable plastic bags for sediment storage
- Indelible marker to label sample bags
- Sample labels, indelible marker, clear tape, custody seals and COC's for samples
- Decontamination materials and procedures from the Field Sampling Plan for sampling spoons
- 10 cc bulk density sample tubes if required by Field Sampling Plan
- Coolers and ice to maintain sample temperature through shipping
- Appropriate shipping labels and placards for materials being shipped
- Log book

Supplies

- Buckets, brushes, hoses and appropriate materials for cleaning exclusion zone and decontamination of sampling devices as required by the Field Sampling Plan
- Clear tape, duct tape and electrical tape
- Indelible markers for labeling
- Refrigeration unit or ice filled cooler to maintain 4-8 degree Celsius sample temperature and prevent photodegradation of samples
- Appropriate PPE as specified in the Health and Safety Plan, including but not limited to steel toe boots, eye and ear protection, gloves and Tyvek
- Lab log book to record data (e.g., sample date, time, horizon, comments)
- A PC for digital COC records is recommended but not required

9.0 Instrument or Method Calibration

The motorized core splitting device may need adjustments to accommodate different size core liners, a test should be conducted on an empty liner prior to cutting samples until the desired depth of cut is achieved.

10.0 Sample Collection Procedure

Samples are collected in accordance with the Field Sampling Plan at designated horizons or intervals. The Field Sampling Plan will indicate if homogenization is needed as well as the number of field duplicates required.

Standard core splitting procedure

- Clean outside of core liner.

- Make sure sediment is flush with end caps; if not use a hacksaw to cut excess core liner and recap.
- Place core in splitter stand, secure ends; avoid over tightening which may bow core.
- Use motorized core splitter to cut majority of liner without exposing the sediment.
- Move core to splitting table (ideally table is waist high).
- Cut remainder of liner with sharp decontaminated utility knife.
- Starting at the top of the core, pull piano wire between core halves.
- Separate core halves; use decontaminated spatulas if necessary.

Standard photographing procedure

- Make sure the top of the core is located at zero on the scale.
- Digital camera must be set at a constant height above core; do not use zoom lens.
- Adjust camera stand such that each digital image captures approximately 30cm of core.
- Space digital images so that there is a minimum of a 5cm overlap between images.
- Adjust soft white light so that the color scale and core are not shadowed.
- Be careful not to create a glare off the color scale or moisture on the core.
- Record the image number in the lab log book along with the length of core in the image.
- Download digital images to PC and label appropriately.

Standard visual description of core

- Measure and record exact length of core.
- Note any distinct lithologies in core.
- Describe color using a Mussel Color Chart; note any variation in color with depth.
- Note odor.
- Note texture of sediment and apparent water content.
- Describe apparent grain size (i.e. silty-clay or sandy-silt).
- Note depth and identify any organisms found (i.e. polycheate 5-10cm).
- Note depth of any shells or gravel as well as any miscellaneous items present.

Standard sampling procedure

- Label jars/bags with date, project, and appropriate core and horizon identifiers, as stated in the Field Sampling Plan.
- If vane shear strength is conducted, follow the SOP for the Laboratory Vane with motorized unit before subsampling for chemistry or geotechnical analysis.
- Use clean decontaminated stainless steal sampling spoon for each sample.
- Collect appropriate amount of material and homogenize in accordance with the Field Sampling Plan.
- Seal container to avoid cross contamination and moisture loss.

- Place custody seal across jar lid or outer most bag as required by the Field Sampling Plan.
- Store all samples in the dark at 4 degrees Celsius until shipped; note any holding time requirements in the Field Sampling Plan.

Standard shipping procedure

- Samples will be shipped at 4-8 degrees Celsius on wet ice.
- Ice is double bagged in sealable plastic storage bags to prevent leaking.
- All samples are wrapped for shipping and sealed in a resealable plastic bag.
- Temperature blanks are included with each shipment.
- COC's will accompany each shipment inside the cooler attached to the cooler lid in a resealable plastic bag.
- Arrangements with laboratories conducting the analysis are made to receive shipments in a timely manor.
- All holding times and special shipping requirements are met as stated in the Field Sampling Plan.
- Appropriate shipping labels and placards for materials being shipped are fixed to the cooler and custody seals are placed on the cooler.

11.0 Sample Preparation

Half core method

- Use core splitter and utility knife to cut core in half
- Pull piano wire between core halves to separate
- Section core in two
- Photograph
- Visual descriptive analysis of core
- Vane shear strength analysis if required by Field Sampling Plan
- Subsample for chemistry and or geotechnical as stated in Field Sampling Plan
- Store samples in appropriate sample containers as stated in Field Sampling Plan and label appropriately

12.0 Trouble Shooting

This section is not applicable to this Standard Operating Procedure.

13.0 Data Acquisition and, Calculations and Data Reduction

This section is not applicable to this Standard Operating Procedure.

14.0 Computer Hardware and Software

- A laptop PC with Excel or comparable spreadsheet formatting for digital COC's and digital images
- Digital camera software for the downloading digital images, cables and appropriate camera links (Flashpath, Camera specific software).
- Photo manipulation software (Adobe PhotoShop) to mosaic multiple core images

15.0 Data Management and Records Management

- All images are stored digitally on hard drive and on 100 MB removable diskette and archived into the project database
- COC's are kept digitally and in hard copy on site
- Laboratory log books are archived

16.0 Quality Assurance/Quality Control (QA/QC)

- Follow Field Sampling Plan
- Follow S.O.P. for core sampling activities
- Make sure all sample meet QA/QC described in the project specific Field Sampling Plan

17.0 Checklists

This section is not applicable to this Standard Operating Procedure.

18.0 References

SAIC. 2000. Field Sampling Plan for the Palos Verdes Capping Project.

Standard Operating Procedure (SOP)
For
The Collection and Analysis of Sediment Profile Images

Revision 01
July 24, 2000

Prepared by: Melissa Swanson Date: June 16, 2000
Marine Staff Scientist

Reviewed by: Ted Turk Date: June 23, 2000
Senior Scientist

Approved by: Ray Valente Date: June 26, 2000
Project Quality Assurance Officer

Science Applications International Corporation
221 Third Street
Newport, RI 02840

Table of Contents

1.0 Scope and Applicability

The sediment profile camera (SPC) provides a cross-sectional photograph of surface and near-surface sediment on 35 mm slide film. Each photographic image provides a 20 cm high by 14 cm wide "profile" of the surface and near-surface sediments. SPC images provide information describing sediment grain-size, sedimentary fabric, benthic infauna, and physical and biological processes. This technology has been used extensively to map the extent of sediment caps and deposits, to conduct sediment quality surveys and sedimentation monitoring, and perform impact assessments associated with confined aquatic disposal (CAD), aquaculture, and oil exploration and production platforms.

For monitoring activities, SPC sampling can also incorporate plan view underwater photography. This technique generates a plan view (top down) photograph of the seafloor immediately prior to penetration of the SPC prism. This information complements the SPC sediment profile data by providing a visual inspection of surficial features on the seafloor.

2.0 Summary of Method

This SOP defines the methods and procedures to be followed to collect SPC images, SPC system maintenance and troubleshooting. The Benthos model 3731 sediment profile camera consists of an Olympus OM-1 35 mm camera and timing circuit board in a pressure vessel mounted on a wedge-shaped prism with a Plexiglas face plate; light is provided by an internal strobe (Figure 1). The back of the prism has a mirror mounted at a 45° angle to reflect the profile of the sediment-water interface up to the camera which is mounted horizontally on the top of the prism. The prism is filled with distilled water. The camera prism is mounted on an assembly that can be moved up and down by allowing tension or slack on the hydrowire. The rate of fall of the prism into the bottom is controlled by an adjustable "passive" hydraulic piston. The system has a rated depth of 4000 meters.

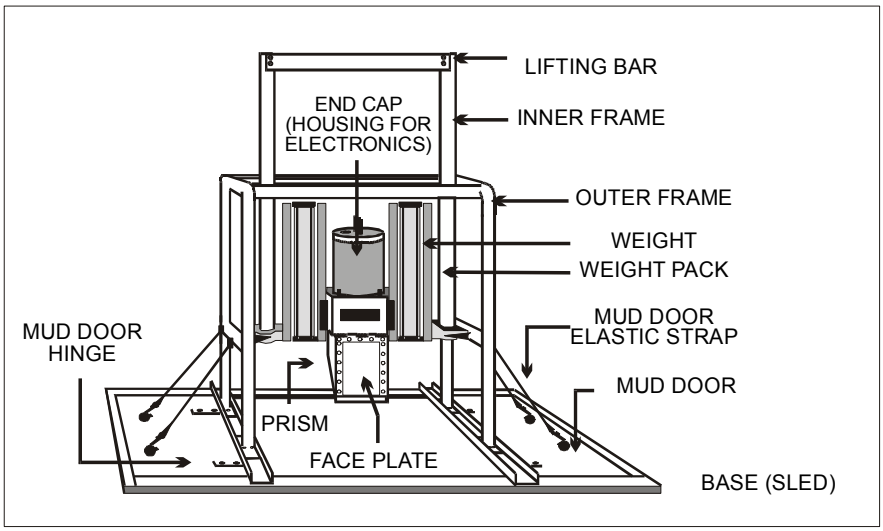

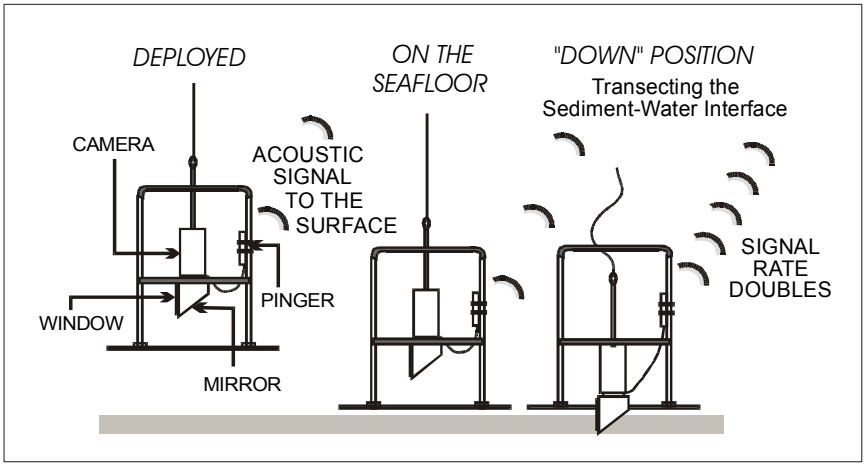

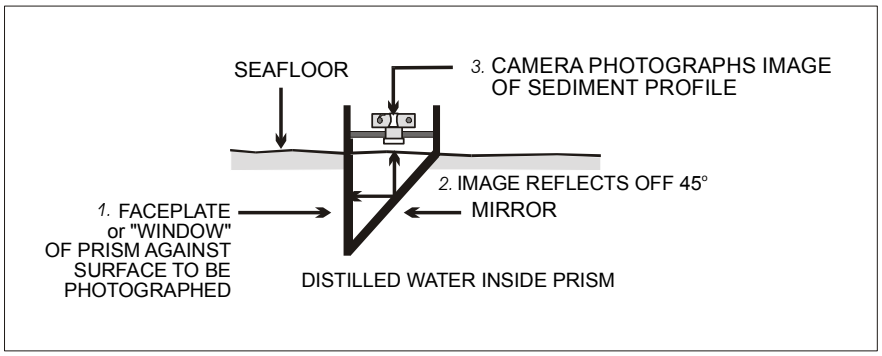

Figure 1. Schematic diagram of Benthos, Inc. Model 3731 sediment-profile camera and sequence of operation on deployment.

3.0 Definitions

- SPC-Sediment Profile Camera. An underwater camera system that provides a cross-section photograph of surface and near surface sediment to determine sediment grain size, sedimentary fabric, benthic infauna and physical and biological processes on 35mm slides.
- SPI-Sediment Profile Imaging. The process of obtaining and analyzing the physical and biological characteristics of the seafloor using 35mm slides obtained by the SPC.
- REMOTS®-Remote Ecological Monitoring Of The Seafloor. Trademark name of the SPC that is used for the SPI process.
- Frame-Stainless steel chassis, including the prism, to which the head is mounted.
- Head-Combination of the pressure vessel and end cap; houses camera.
- Pressure Vessel-Pressurized cylinder with handle and view port which goes over the end cap.
- End Cap-Base of the head assembly, includes strobe, end cap lens, OM-1 camera, electronics for firing SPC.
- End Cap Lens-Thick Plexiglas lens through which the OM-1 takes photo
- Prism-Wedge shaped portion of chassis assembly, filled with spring water and has mirror mounted at 45 degree angle.
- Head Stand-Wooden box with 8 inch hole in top for holding head or end cap prior or post mounting onto chassis.
- JOBO-Film processing unit. Has a heating element and motor for agitating film during processing.

4.0 Health and Safety Warnings

The sediment profile camera is a heavy piece of sampling equipment. The operator must use caution when deploying and retrieving this gear, especially under adverse weather conditions. Proper safety equipment (hard hat, safety vest, steel-toed boots/shoes) will be worn by all personnel operating the camera. Under adverse weather conditions, tag lines will be used to secure the camera during deployment and retrieval.

5.0 Cautions

Care must be taken to reduce possible damage to the strobe arm and E/O plugs. Damage to these components can allow the head to be flooded damaging the OM-1 and internal electronics.

Before removing or replacing the pressure vessel on the end cap, the slot switch for the head must be in the off position.

The counter display is illuminated with an LED, visible through the view port on the top of the pressure vessel. The display goes black after a few seconds once the head has been turned on. Test shots should be triggered when this display is off.

Change roll of film before the physical end of the roll is reached. If the camera attempts to advance beyond the end of the roll the motor-winder and IC board can be damaged.

6.0 Interferences

Floatable debris inside the prism can cause optical backscatter and reduce image quality.

Condensation on the end cap lens can occur while changing rolls of film when the head is colder than ambient air temperature. Film must be changed quickly and desiccant must be replaced frequently to help minimize condensation. Blowing nitrogen gas into the pressure vessel prior to seating on the end cap helps to reduce condensation.

7.0 Personnel Qualifications

Cruise Leader/Chief Scientist: The Cruise Leader/Chief Scientist is responsible for ensuring that proper procedures are followed by all field personnel in conducting SPC sampling as well as all applicable field quality assurance procedures.

Field Scientist: The Field Scientists are responsible for operating the SPC camera, maintaining all field notes and observations, navigation of the vessel to the desired sampling location, and ensuring that proper SPC sampling procedures are followed.

Any individual who will be maintaining and operating the SPC and processing SPC image film should be trained in these operations. All individuals operating the SPC will be readily familiar with the technical and operational aspects of the equipment. All individuals processing SPC image film will be readily familiar with the technical and operational aspects of the processing equipment as specified in the operation manual.

8.0 Apparatus and Materials

Below is a basic list of the equipment needed to collect SPC images.

SPC Equipment Checklist:

- Benthos Model 3731 Sediment Profile Camera
- 25 lb. lead weights (5 sets of 2)
- 7.2 v rechargeable battery packs
- Benthos pinger
- ASA 100 color slide film
- "Mud" doors
- Glass cleaner and paper towels
- Distilled water
- Winch and hydrowire
- Swivel
- Field notebooks/sampling logs
- Navigation system
- SPC tool kit with stainless hardware spares

9.0 Instrument Calibration Prior to Mobilization

Bench Testing and SPC Maintenance

Check all assemblies for damage. Is the strobe arm bent? Is there corrosion on the sealing surfaces or O-ring lands? Are there scratches on the lens? Are the latches on the pressure vessel loose or bent? Are there loose components (lens, board, camera mount) or poor solder connections and loose wires? Does the chassis have loose or missing bolts? Is the bladder leaking or cracked? Is the wiper blade worn? Is the faceplate on the prism scratched? Is the mirror flaking or cracked?

9.1 Head O-ring Servicing

Place the head on the head stand and remove the O-rings from the lands. Check the O-rings carefully; if there are any nicks or pinched spots, replace O-rings. Polish the seating surfaces with a nylon abrasive pad and then clean the O-ring lands with cotton swabs and alcohol. Lubricate the O-rings with clean dielectric silicone lubricant and reinstall.

9.2 End Cap Lens Servicing

Remove the end cap lens by loosening screws on holding posts. Number and mark the posts positions on the end cap before removing and note spacers and their posts for easier re-assembly. Remove and clean the inside of the end cap lens with lens cleaner, the pressure side of the lens is annealed and can be cleaned with glass cleaner. Check O-ring for wear and clean O-ring lands with cotton swab and alcohol. Lubricate with dielectric silicone lubricant and reinstall or replace O-rings. Reassemble, placing posts and spacers as they were found or possible flooding of the camera housing may result. Anytime a component is removed or replaced which will affect the watertight integrity of the head it should be tested for leakage. For deep water jobs, 2000 m or more, the head should be pressure tested to over the working depth.

9.3 Faceplate and Mirror Replacement

If the mirror is cracked or flaking it should be replaced. It is easier to remove and replace the mirror with the faceplate off; note the location of screws. Pry the mirror out, it is attached with silicone adhesive. Coat the replacement mirror with epoxy on the back and edges to minimize flaking. Put beads of silicone adhesive on the back of replacement mirror in the corners and down the longer edges. Do not overload the mirror with silicone adhesive and remember to leave gaps in the bead to allow pressure equalization. Do not create an air bubble behind the mirror. If the faceplate is badly scratched it should be replaced. Tighten down face plate panels evenly.

9.4 Pinger Maintenance

Remove the end cap from the pinger and remove the pressure tube. Remove O-rings from the lands. Using a paper towel and fresh water, wipe off the O ring lands and sealing surfaces to remove any traces of salt water. Check the O-rings carefully; if there are any nicks or pinched spots, replace O-rings. Polish the seating surfaces with a nylon abrasive pad and then clean the O-ring lands with cotton swabs and alcohol. Lubricate the O-rings with clean dielectric silicone lubricant and reinstall. Test the battery voltage and replace the 20 “C” cell batteries if needed.

9.5 Test SPC System

The trigger and pinger contacts should be cleaned with a pencil eraser. With the end cap on the head stand, install a charged battery, plug in the pinger and trigger, and fire multiple test shots to verify proper operation of system. The pinger rate should double, the strobe should fire, the OM-1 camera should advance, and the LED display should increase by one with each test shot.

10.0 Sample Collection, Handling and Preservation

The following procedures will be followed when deploying and recovering the SPC and collecting SPC images.

10.1 SPC Deployment

Prior to survey mobilization, the camera head will be "bench-tested" to ensure that the camera is focused, firing properly, and the strobe is operational. Spare camera parts, fully-charged battery packs, and slide film will be carried in the field to ensure uninterrupted sample acquisition.

At the beginning of each survey day, the time on the data logger mounted on the SPC will be synchronized with the navigation system clock. Each SPC station replicate is identified by the time recorded on the slide and the corresponding time and position recorded by the navigation system. Redundant sample logs will be kept by the field crew. Test shots will be fired on deck at the beginning of each roll of film to verify all internal electronic systems are working according to specifications.

The SPC system is attached to the hydrowire. As the camera is lowered to the seafloor, at a rate of about 1 m/sec, tension on the wire keeps the prism in the 'up' position. Once the camera frame contacts the bottom, slack on the wire will allow the prism to vertically cut the seafloor. The optical prism descends at approximately 6 cm/second.

The prism is driven by the weight of the assembly several centimeters into the bottom sediments. The camera trigger is tripped by the impact with the bottom, activating a 13-second time delay on the shutter release, which gives the prism a chance to obtain maximum penetration before a photo is taken. A Benthos Model 2216 Deep Sea Pinger is attached to the camera and outputs a constant 12 kHz signal of one ping per second; upon discharge of the camera strobe, the ping rate doubles for 10 seconds. Monitoring the signal output on deck provides confirmation that a successful image was obtained. Because the sediment photographed is directly against the face plate, turbidity of the ambient seawater does not affect image quality.

As the camera is raised off the bottom, a wiper blade automatically cleans any sediment off of the prism faceplate. The film is automatically advanced by a motor winder, the strobes are recharged, and the camera can be lowered for another replicate image.

When the camera is brought to the surface, the frame count is verified and the camera prism penetration is estimated from a penetration indicator that measures the distance the prism fell relative to the camera base. If penetration is inadequate, two weight packs, each capable of holding 125 lbs. of lead (in 25 lb. increments) is loaded to increase penetration. If penetration is too great, adjustable stops which control the distance the prism can descend are lowered. In addition, "mud" doors can be attached to each side of the frame to increase the surface bearing of the entire unit.

Three replicate images are taken at each SPC station. Once a full roll of film is collected, the camera is brought onto the deck of the vessel, and the film changed. All completed rolls are stored in a secure place aboard the vessel. At the end of each survey day, the film is developed to ensure that adequate images are obtained.

Mobilization and Installation of SPC

- Attach bottom frame to chassis.
- Remove cover from prism chamber, clean mirror, and siphon distilled water into chamber. Allow to flow over edge to purge chamber of floatable debris.
- Install camera head assembly in chamber carefully to avoid both damaging strobe and trapping air bubbles in chamber.
- Secure head assembly on chamber with 4 cam screws.
- Attach trigger to chassis and connect to camera head assembly.
- Attach pinger to chassis and connect to camera head assembly.
- Attach wiper bar to bottom frame.
- Install lead weights (as needed).
- Remove pressure vessel by releasing 3 latches and lifting vertically.
- Remove OM-1 camera body after releasing set screw and disconnecting sync cord.
- Clean lens port and apply anti-fog.
- Clean camera lens and apply anti-fog. Lens should have 7mm expander ring attached.
- Set F-stop to 8, shutter speed to 1/60 second, focus to 8 feet, sync to “x” and ASA at 100.
- Install OM-1 camera body in head, connect sync cord and secure with set screw.
- Load film and advance 1 frame using lever and shutter release.
- Close camera back and advance 2 frames until counter window is set for “1”.
- Turn databack on.
- Enter time on camera databack and set ASA to 100, synchronized with navigation system clock.
- Install strobe battery and secure with Velcro strap or black tape, and connect termination to polarity-protected pigtail.

- Test fire SPC by tripping trigger and holding paper with appropriate roll number and date against prism face to record roll number.
- Check counter display for frame advance by alternately turning off and on the head with the slot switch.
- Clean O-ring and pressure vessel surface areas, then regrease with dielectric silicone lubricant.
- Purge pressure vessel with nitrogen gas and close true to mating surfaces without rolling O-rings from their lands.
- Secure 3 latches simultaneously.
- Test fire SPC as before.
- Check counter display as before.
- Turn head off with the slot switch.
- Attach winch cable, mouse shackles and check cable grips for tightness.

Operate SPC

- Zero penetrometer.
- Winch SPC over the ship's gunnel and secure to outer rail.
- Remove chassis safety pins and activate pinger and head with slot switches.
- Check display through top port.
- Lower SPC to seafloor and provide adequate cable slack for 30 seconds or until pinger rate doubles to twice per second.
- Raise SPC 2 meters above seafloor to allow system to cycle charge for repeat photo.
- Repeat previous 2 steps as required.
- Raise SPC and secure to gunnel, prism face outward bound.
- Measure penetration and reset indicator.
- Deactivate SPC.
- Reactivate SPC and check counter display through view port.

Change Battery and Film

- Install chassis safety pins.
- Winch SPC on deck.
- Dry upper chassis after wrapping cable and swivel with towel.
- Turn SPC head and pinger off with slot switch.
- Dry pressure vessel and release the 3 latches.

- Remove case and dry O-ring surfaces.
- Release rewind switch on OM-1 camera body and rewind film. Keep finger on camera back to minimize back popping open and accidental exposure of film.
- Remove film canister and strobe battery (every other film change).
- Completely discharge used battery with light.
- Check voltage of recharged battery (7 volts).
- Reload with new roll of film and recharged battery as previously described.
- Recharge discharged battery for 6-8 hours.
- Test fire SPC and close head as before.

Demobilize SPC

- Rinse chassis and head with fresh water.
- Remove head from chassis and drain prism chamber.
- Wrap trigger in bubble wrap and pack with head.
- Install Plexiglas chamber cover.
- Remove wiper bar.
- Remove chassis from base frame.

10.2 Sample Handling & Preservation

Processing SPC slide film

Exposed film from the SPC head must be stored in a cool, secure location prior to processing. Before processing film ensure the reels, tank, light trap and lid are completely dry.

Into black bag place:

- Bottle opener
- Film to be processed
- Reels, 1 per roll of film
- Tank with light trap (center tube)
- Lid for tank
- Scissors
- Electrical tape

Use bottle opener to open film cassette, side opposite the nipple. Cut the film end square and spool onto the reel. Minimize finger contact with the film surfaces, touch only the outer edges. Once the film is on the reel put reel on light trap tube. After all the film is on reels and light trap tube, place into tank, flange end of the light trap in first. Snap lid onto tank. Secure lid to tank with electrical tape. Open dark bag, clean out garbage, remove the tank and check electrical tape. If tape is too bulky the tank will not fit into the JOBO properly.

The JOBO processor has a temperature bath and a motor to rotate the tank during development. A magnet at the bottom of the tank sticks to a magnet on the JOBO motor. The motor rotates continuously until the power is shut off. An adjustable heater keeps the water bath at constant temperature; there are positions for the processing chemicals in the water bath. The JOBO is stored in a large cooler for easy transport and in the event of shipboard processing will contain spills of the temperature bath.

The processing chemicals used are for an E-6 three bath plus process, one liter mix. For specific information regarding temperatures and dilutions, refer to kit instructions. A one-liter kit will process 12 rolls of film. Processing times will increase with the number of rolls processed. See instructions for details. Fresh chemicals must be mixed for each new survey unless they are less than 7 days old, have more than 3 rolls of processing left, and were stored in a cool dark place. When mixing fresh chemicals pre-rinse storage and measuring containers three times with clean, warm to hot water before using.

Measure water into storage containers, then add the concentrated chemicals. Warm water should be used, 68-104° F (20-40° C). If mixing immediately prior to film processing, use water about 95° F to minimize heating time in the JOBO temperature bath. Processing temperature is 100° F (38° C). If using a knife or scissors to puncture the seal on the concentrated chemical bottles, wash between chemicals to avoid cross contamination. Cap chemicals tightly and agitate end over end 10 times to mix.

Prepare the JOBO processor by filling the water bath with warm water, as near to 95-98° F as possible while still being less than 100° F. The JOBO heater will continue heating the water and maintain a constant temperature during processing. The chemical containers sit in slots in the JOBO temperature bath during processing to maintain constant temperature.

Adding chemicals to the tank must be done quickly and JOBO rotation started immediately. Follow processing times listed in chemical instructions. After the bleach-fix the film is no longer light sensitive. A safe, clean, dust free area is needed for the film to dry. Once the film has been through the stabilizing bath, remove the reels from the tank and carefully remove the film from the reels. While the film is wet the emulsion is very soft and very susceptible to damage. The emulsion side is opposite the shiny plastic side. Hang the film overnight to dry. Medium sized binder clips at the bottom help keep the film hanging straight while drying. After hanging film to dry, all the processing equipment must be rinsed thoroughly and dried. Cross contamination of future rolls of film may occur if tanks and reels are not properly cleaned.

After the film is dry images can be quality checked. By matching the time in the image with that in the log book the image station and replicate can be determined. Three replicates are taken at each station and a minimum of two must be of good quality. Less than two means the site should be revisited. Unacceptable images include:

- Underpenetration/No penetration. In sand check the number of weights and, if more can be added, revisit the site. If the site looks rocky penetration may not be possible. Check the other replicates and make a best estimate whether a good image can be collected at this site.
- Overpenetration. Check the number of weights, possibly use the mud doors, and revisit the site. Some material may be too soft to support the weight of the camera.
- Pull out. The camera prism has started to pull away and is not flush with the sediment when the image is taken; revisit the site.
- Mud Smears. The wiper blade may not be close enough to the prism faceplate or material may be very sticky. Revisit the site after checking the wiper blade.
- Black image. No strobe; check the strobe and revisit the site.
- Water shot. Revisit the site.

11.0 Sample Preparation and Analysis

11.1 Slide Mounting and Labeling

After processing the images need to be mounted as slides. The slide mounter uses 2 "C" cell batteries. Cut the film on the frame line after the last data image. With the raised side of the mounter to the right and the Hama DSR label facing the operator, slide the film in from the left side. The image should be emulsion side down, shiny plastic side up, and the bottom of the image toward the mount. In this configuration the image time stamp will be in the lower right corner. Snap a mount into place on the raised portion of the mounter with the slotted or opening side up and pointing towards the film. Slide the moving part, which will move the film, towards the mount until the image is visible inside the mount. Taking care to insure the frame line is under the cutting blade, cut the film. It is an easy mistake to cut the film in the water portion of the image particularly if there is sand stuck above the wiper blade. Be very certain that the frame line is in the cutting position or data could be lost. All data should be mounted and labeled, including the images deemed unacceptable for analysis.

Once all the images are mounted they are ready to be labeled. Using the log book time and the imprinted time on the image, identify the station and replicate. In the upper left corner write the survey identifier. In the upper right corner write the date the image was taken. In the lower left corner write the station identifier and replicate. In the lower right corner write the time the image was taken from the image itself, <u>not</u> the log book time. Slides are stored in plastic binder pages.

11.2 SPC Image Analysis

The SPC images are analyzed with the full-color, SAIC Image Analysis System. This is a PC-based system integrated with a Javelin CCTV video camera and frame grabber. Color slides are digitally recorded as color images on computer disk. The image analysis software is a menu-driven program that incorporates user commands via keyboard and mouse. The system displays each color slide while measurements of physical and biological parameters are obtained. Proprietary SAIC software allows the measurement and storage of data on up to 21 different variables for each SPC image obtained. Automatic disk storage of all measured parameters allows data from any variables of interest to be compiled, sorted, displayed graphically, contoured, or compared statistically. All measurements are printed out on data sheets for a quality assurance check by an SAIC Senior Scientist before being approved for final data synthesis, statistical analyses, and interpretation. A summary of the major categories of SPC data is presented below.

Sediment Type Determination

The sediment grain size major mode and range are estimated visually from the photographs by overlaying a grain size comparator which is at the same scale. This comparator was prepared by photographing a series of Udden-Wentworth size classes (equal to or less than coarse silt up to granule and larger sizes) through the SPC camera. Seven grain size classes are on this comparator: >4 ϕ, 4-3 ϕ, 3-2 ϕ, 2-1 ϕ, 1-0 ϕ, 0-(-1 ϕ), and <-1 ϕ. The lower limit of optical resolution of the photographic system is about 62 microns (4 ϕ), allowing recognition of grain sizes equal to or greater than coarse silt. The accuracy of this method has been documented by comparing SPC estimates with grain size statistics determined from laboratory sieve analyses.

The major modal grain size that is assigned to an image is the dominant grain size as estimated by area within the imaged sediment column. In those images that show layering of sand and mud, the dominant major mode assigned to a replicate therefore depends on how much area of the photograph is represented by sand versus mud. These textural assignments may or may not correspond to traditional sieve analyses depending on how closely the vertical sampling intervals are matched between the grab or core sample and the depth of the imaged sediment.

Boundary Roughness

Small-scale surface boundary roughness is measured from an image with the computer image analysis system. This vertical measurement is from the highest point at the sediment-water interface to the lowest point. This measurement of vertical relief is made within a horizontal distance of 15 cm (the total width of the optical window). Because the optical window is 20 cm high, the greatest possible roughness value is 20 cm. The source of the roughness is described if known. In most cases this is either biogenic (mounds and depressions formed by bioturbation or foraging activity) or relief formed by physical processes (ripples, scour depressions, rip-ups, mud clasts, etc.).

Optical Prism Penetration Depth

The optical prism penetrates the bottom under a static driving force imparted by the weight of the descending optical prism, camera housing, supporting mechanism, and weight packs. The penetration depth into the bottom depends on the force exerted by the optical prism and the bearing strength of the sediment. If the weight of the camera prism is held constant, the change in penetration depth over a surveyed site will reflect changes in geotechnical properties of the bottom. In this sense, the camera prism acts as a static-load penetrometer. The depth of penetration of the optical prism into the bottom can be a useful parameter, because dredged and capped materials often will have different shear strengths and bearing capacities.

Mud Clasts

When fine-grained, cohesive sediments are disturbed, either by physical bottom scour or faunal activity (e.g., decapod foraging), intact clumps of sediment are often scattered about the seafloor. These mud clasts can be seen at the sediment-water interface in SPC images. During analysis, the number of clasts is counted, the diameter of a typical clast is measured, and their oxidation state is assessed. Depending on their place of origin and the depth of disturbance of the sediment column, mud clasts can be reduced or oxidized. Also, once at the sediment-water interface, these sediment clumps are subject to bottom-water oxygen levels and bottom currents. Based on laboratory microcosm observations of reduced sediments placed within an aerobic environment, oxidation of reduced surface layers by diffusion alone is quite rapid, occurring within 6-12 hours (Germano 1983). Consequently, the detection of reduced mud clasts in an obviously aerobic setting suggests a recent origin. The size and shape of mud clasts, e.g., angular versus rounded, are also considered. Mud clasts may be moved about and broken by bottom currents and/or animals (macro- or meiofauna; Germano 1983). Over time, large angular clasts become small and rounded. Overall, the abundance, distribution, oxidation state, and angularity of mud clasts are used to make inferences about the recent pattern of seafloor disturbance in an area.

Measurement of Dredged Material

The recognition of dredged material from SPC images is usually based on the presence of anomalous sedimentary materials within an area of ambient sediment. The ability to distinguish between ambient sediment and dredged material requires that the survey extend well beyond the margins of a disposal site so that an accurate characterization of the ambient bottom is obtained. The distributional anomalies may be manifested in topographic roughness, differences in grain size, sorting, shell content, optical reflectance, fabric, or sediment compaction (i.e., camera prism penetration depth). Second-order anomalies may also provide information about the effects of dredged material on the benthos and benthic processes such as bioturbation (see following sections).

Apparent Redox Potential Discontinuity (RPD) Depth

Aerobic near-surface marine sediments typically have higher reflectance values relative to underlying anoxic sediments. Sand also has higher optical reflectance than mud. These differences in optical reflectance are readily apparent in SPC images. The oxidized surface sediment contains particles coated with ferric hydroxide (an olive color when associated with particles), while reduced and muddy sediments below this oxygenated layer are darker, generally grey to black. The boundary between the colored ferric hydroxide surface sediment and underlying grey to black sediment is called the apparent redox potential discontinuity (RPD).

In the presence of bioturbating macrofauna, the thickness of the high reflectance layer may be several centimeters. The relationship between the thickness of this high reflectance layer and the presence or absence of free molecular oxygen in the associated pore waters must be made with caution. The boundary (or horizon) which separates the positive Eh region (oxidized) from the underlying negative Eh region (reduced) can only be determined accurately with microelectrodes. For this reason, we describe the optical reflectance boundary, as imaged, as the "apparent" RPD, and it is mapped as a mean value.

Sedimentary Methane

At extreme levels of organic-loading, pore-water sulfate is depleted, and methanogenesis occurs. The process of methanogenesis is detected by the appearance of methane bubbles in the sediment column. These gas-filled voids are readily discernible in SPC images because of their irregular, generally circular aspect and glassy texture (due to the reflection of the strobe off the gas). If present, the number and total areal coverage of all methane pockets are measured.

Infaunal Successional Stages

Pioneering assemblages (Stage I assemblages) usually consist of dense aggregations of near-surface living, tube-dwelling polychaetes; alternately, opportunistic bivalves may colonize in dense aggregations after a disturbance (Rhoads and Germano 1982, Santos and Simon 1980). These functional types are usually associated with a shallow redox boundary; bioturbation depths are shallow, particularly in the earliest stages of colonization. If small polychaetes are seen at the sediment surface, the image is designated Stage I.

In the absence of further disturbance, these early successional assemblages are eventually replaced by infaunal deposit feeders; the start of this "infaunalization" process is designated arbitrarily as Stage II. Typical Stage II species are shallow dwelling bivalves or, as is common in New England waters, tubicolous amphipods. If amphipods or shallow dwelling bivalves are seen in an image, a Stage II designation is given.

Stage III taxa, in turn, represent high-order successional stages typically found in low-disturbance regimes. These invertebrates are infaunal, and many feed at depth in a head-down orientation. The localized feeding activity results in distinctive excavations called feeding voids. Diagnostic features of these feeding structures include a generally semicircular shape with a flat bottom and arched roof, and a distinct granulometric change in the sediment particles overlying the floor of the structure. This granulometric change is caused by the accumulation of coarse particles that are rejected by the animals feeding selectively on fine-grained material. Other subsurface structures, such as

burrows or methane gas bubbles, do not exhibit these characteristics and therefore are quite distinguishable from these distinctive feeding structures. When feeding voids are visible, the image is given a Stage III designation.

The end-member stages (Stages I and III) are easily recognized in SPC images by the presence of dense assemblages of near-surface polychaetes and the presence of subsurface feeding voids, respectively; both types of assemblages may be present in the same image (Stage I on III designation). Additional information on SPC image interpretation can be found in Rhoads and Germano (1982, 1986).

Organism-Sediment Index (OSI)

The multi-parameter SPC Organism-Sediment Index (OSI) has been constructed to characterize habitat quality. Habitat quality is defined relative to two end-member standards. The lowest value is given to those bottoms which have low or no dissolved oxygen in the overlying bottom water, no apparent macrofaunal life, and methane gas present in the sediment (see Rhoads and Germano 1982, 1986, for SPC criteria for these conditions). The OSI for such a condition is -10. At the other end of the scale, an aerobic bottom with a deeply depressed RPD, evidence of a mature macrofaunal assemblage, and no apparent methane gas bubbles at depth will have an OSI value of +11.

Table 1. Calculation of SPC Organism Sediment Index Value

A. CHOOSE ONE VALUE:

Mean RPD Depth	Index Value
0.00 cm	0
> 0 - 0.75 cm	1
0.75 - 1.50 cm	2
1.51 - 2.25 cm	3
2.26 - 3.00 cm	4
3.01 - 3.75 cm	5
> 3.75 cm	6

B. CHOOSE ONE VALUE:

Successional Stage	Index Value
Azoic	-4
Stage I	1
Stage I to II	2
Stage II	3
Stage II to III	4
Stage III	5
Stage I on III	5
Stage II on III	5

C. CHOOSE ONE OR BOTH IF APPROPRIATE:

Chemical Parameters	Index Value
Methane Present	-2
No/Low Dissolved Oxygen**	-4

SPC ORGANISM-SEDIMENT INDEX = Total of above subset indices (A+B+C)

RANGE: -10 - +11

** Note: This is not based on a Winkler or polarigraphic electrode measurement. It is based on the imaged evidence of reduced, low reflectance (i.e., high oxygen demand) sediment at the sediment-water interface.

Table 2. Description of benthic habitats (based on Diaz 1995).

Habitat AM: *Ampelisca* Mat Uniformly fine-grained (i.e., silty) sediments having well-formed amphipod (*Ampelisca* spp.) tube mats at the sediment-water interface.
Habitat SH: Shell Bed A layer of dead shells and shell fragments at the sediment surface overlying sediment ranging from hard sand to silts. Epifauna (e.g., bryozoans, tube-building polychaetes) commonly found attached to or living among the shells. Two distinct shell bed habitats: **SH.SI: Shell Bed over silty sediment** - shell layer overlying sediments ranging from fine sands to silts to silt-clay. **SH.SA: Shell Bed over sandy sediment** - shell layer overlying sediments ranging from fine to coarse sand.
Habitat SA: Hard Sand Bottom Homogeneous hard sandy sediments, do not appear to be bioturbated, bedforms common, successional stage mostly indeterminate because of low prism penetration. **SA.F: Fine sand** - uniform fine sand sediments (grain size: 4 to 3 phi). **SA.M: Medium sand** - uniform medium sand sediments (grain size: 3 to 2 phi). **SA.G: Medium sand with gravel** - predominately medium to coarse sand with a minor gravel fraction.
Habitat HR: Hard Rock/Gravel Bottom Hard bottom consisting of pebbles, cobbles and/or boulders, resulting in no or minimal penetration of the REMOTS® camera prism. Some images showed pebbles overlying silty-sediments. The hard rock surfaces typically were covered with epifauna (e.g., bryozoans, sponges, tunicates).
Habitat UN: Unconsolidated Soft Bottom Fine-grained sediments ranging from very fine sand to silt-clay, with a complete range of successional stages (I, II and III). Biogenic features were common (e.g., amphipod and polychaete tubes at the sediment surface, small surface pits and mounds, large borrow openings, and feeding voids at depth). Several sub-categories: **UN.SS: Fine Sand/Silty** - very fine sand mixed with silt (grain size range from 4 to 2 phi), with little or no shell hash. **UN.SI: Silty** - homogeneous soft silty sediments (grain size range from >4 to 3 phi), with little or no shell hash. Generally deep prism penetration. **UN.SF: Very Soft Mud** - very soft muddy sediments (>4 phi) of high apparent water content, methane gas bubbles present in some images, deep prism penetration.

The OSI is a sum of the subset indices shown in Table 1. The OSI is calculated automatically by SAIC software after completion of all measurements from each SPC photographic negative. The index has proven to be an excellent parameter for mapping disturbance gradients in an area and documenting ecosystem recovery after disturbance (Germano and Rhoads 1984, Revelas et al. 1987, Valente et al. 1992).

Benthic Habitat Characterization

Benthic habitat characterization is based on Diaz (1995), who defined four basic habitats (Table 2) and classified each sampled station into one of nine total subhabitat types. Habitat AM is *Ampelisca* Mat with silty sediments and many animals. The shell bed (SH) habitat has two subhabitat types, shell bed over silty sediment (SH.SI) and shell bed over sandy sediment (SH.SA). There are three subhabitat types for the hard sand bottom (SA), fine sand (SA.F), medium sand (SA.M) and medium sand with gravel (SA.G). There are also three subhabitat types for unconsolidated soft bottom (UN) sediments, fine sand/silty (UN.SS), silty (UN.SI), and very soft mud (UN.SF).

12.0 Trouble Shooting

Symptom: The camera takes continuous multiple shots when turned on or when first test shot is fired.
Solution: Power off head before it reaches the end of the roll to reduce chance of further damage. Check to see if OM-1 is grounded to the negative power terminal. Be advised this behavior is seen when the IC board and motor winder are OK.

Symptom: Camera will not power up:
Solution: Battery connection or leads are bad. Wiggle connections to see if intermittent; try a new battery. Camera power connection is bad: wiggle connections to see if intermittent; check for continuity with a multimeter. These connections are frequently pulled off the terminal posts.

Symptom: Intermittent strobe
Solution: Check camera flash synchronization connection. The synchronization plug can be cleaned with a little contact cleaner on a cotton swab. Don't spray the camera connections as the cleaner can eat the insulation. If the camera won't strobe when going from a warm environment to cold, i.e. after a film change, condensation on the sync is frequently the problem.

Symptom: The camera jams or runs to the end of the roll of film and the motor winder attempts to advance the film.
Solution: When it cannot advance a transistor in the motor winder may blow. When this transistor goes it frequently blows the IC board as well. Test the motor winder/ IC board combination outside of the head. Remove the motor winder from the head. The power leads need to be unsoldered from the power terminals on the end cap power terminals, and the switch leads (red/white A2 and white A6). Test the motor winder by installing the camera on the motor winder and applying correct polarity power to positive and negative leads. Touch the white and red-white leads together momentarily. The camera should take a single shot and stop. If the camera takes multiple shots, the motor winder probably has a blown transistor. Test the motor winder with another camera body to confirm. If the motor winder is blown, install the spare motor winder and spare IC board. The motor winder and IC board can be hooked up outside of the head and tested. A test kit is stored with the spare board. Hook up the strobe and the X sync to the camera, power and motor winder connections. Jump across the trigger connections and the

camera should work exactly as if in the head. If the all components function normally outside of the head they are probably OK and some component in the head is the problem. Remove and replace the motor winder and IC board as a unit. If the symptoms occur and only the motor winder is replaced, the board may have been damaged by the defective motor winder and will subsequently damage the functioning motor winder.

Symptom: IC board fuse blown.
Solution: Replace and try to determine cause.

13.0 Data Acquisition and, Calculations and Data Reduction

SPI Data Review and Data Reporting

At the end of each survey day the film of the acquired images is processed. When the film is dry the images are reviewed and stations requiring re-sampling are noted. After the survey is complete and the slides are mounted and labeled, the images are analyzed (Figure 2).

During image analysis, the various parameters are measured, and the data for each image are stored in their own REMOTS® Data Sheet (RDS) file. Upon completion of analyses, all RDS files are printed out and reviewed with the slides by a senior scientist. Edits are noted on the hard copy RDS printouts and then entered into the electronic file. Re-measurement of parameters using the image analysis system is done at this time. When all edits and re-measurements are complete, the data from all RDS files are exported into bulk data spreadsheet format. The bulk data spreadsheet is compared to the edited RDS hard copies to ensure accuracy. The SPC images are scanned to create electronic files in .TIF format. An archive CD is created to store all the image files, RDS files, and the spreadsheet of the exported bulk data. Data products (tables and maps) are created from the bulk data spreadsheet. The original images and edited RDS sheets are stored in a binder in an archive room.

DATA REDUCTION, VALIDATION AND REPORTING

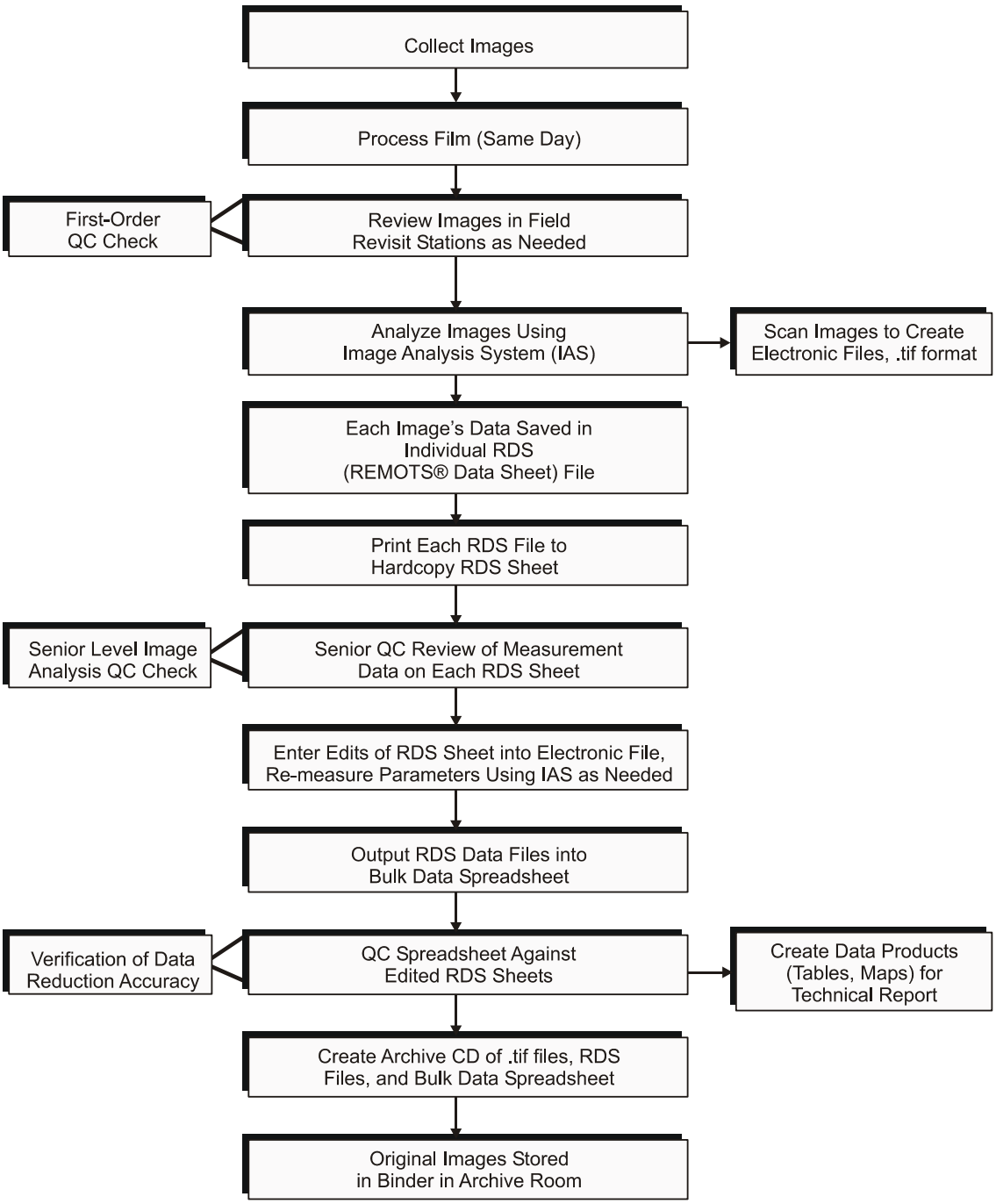

Figure 2. Flow chart of data reduction, validation and reporting for SPC images.

14.0 Computer Hardware and Software

The SPC images are analyzed with the full-color, SAIC Image Analysis System. This is a PC-based system integrated with a Javelin CCTV video camera and frame grabber. Color slides are digitally recorded as color images on computer disk. The image analysis software is a menu-driven program that incorporates user commands via keyboard and mouse. This software was created by SAIC using the "C" programming language. The system displays each color slide while measurements of physical and biological parameters are obtained. Proprietary SAIC software allows the measurement and storage of data on up to 21 different variables for each SPC image obtained. Automatic disk storage of all measured parameters allows data from any variables of interest to be compiled, sorted, displayed graphically, contoured, or compared statistically. All measurements are printed out on data sheets (RDS sheets) for a quality assurance check by an SAIC Senior Scientist before being approved for final data synthesis, statistical analyses, and interpretation. When all edits and re-measurements are complete, the data from all RDS files are exported into bulk data spreadsheet format. The SPC images are scanned to create electronic files in .TIF format. An archive CD is created to store all the image files, RDS files, and the spreadsheet of the exported bulk data.

15.0 Data Management and Records Management

15.1 Electronic Data

A laptop personal computer is used to display the navigation data and to store it on hard disk. At the end of each day of survey the daily navigation data is copied onto diskette.

15.2 Field Data

During survey operations, exposed rolls of 35 mm film from the sediment profile camera will be carefully marked according to: project name, date, time, serial number of the camera, and station numbers surveyed. Roll number and all pertinent information will be entered on the appropriate chain of custody (COC) form. At the end of each day of survey operations, film rolls will be transferred to the person responsible for shore-based data processing.

Field Logs

Documentation associated with SPI consists of field logs, notes and narratives associated with data processing, review, and interpretation. The log will be used to document all sampling and data recording events, as well as other significant activities or problems encountered during survey operations. Maintenance and custody of the log will be the responsibility of the Field Leader. Upon completion of the survey activities, the log will be provided to the SAIC Project Manager.

If a significant deviation from the Field Sampling Plan is necessary, the field leader aboard the survey vessel is responsible for noting such deviations in the field log, and notifying the SAIC Project Manager as soon as possible (e.g., via a telephone call to shore during the survey activities). It will be the responsibility of the SAIC Project Manager to contact the Project Manager to discuss the deviations and potential alternatives/corrective actions. More detailed rules governing the use of logbooks can be found in the FSP and QAPP of this Project Work Plan.

Corrections to Documentation

If errors or omissions in the field logs or sample documentation records are identified by project personnel involved with the survey, these occurrences will be communicated to both the SAIC Project Manager and the QA/QC Officer for the project. The need for any significant corrections will first be documented in writing, then corrections will be made in red ink on the original logs or records. Additionally, corrections will be dated and signed by the person affecting the change.

The SAIC Project Manager will be responsible for security of all field records and project data/information acquired during survey operations. Originals of Logs and data records will be maintained in a secure storage facility at SAIC's Newport, Rhode Island, office. Additionally, back-up copies of all digital data will be stored on magnetic medium in an appropriate storage area. Processed data will be maintained in the project Geographic Information System, and frequent (i.e., daily) backups of the data archive will be part of the routine procedure for maintenance of the data system.

15.3 Image Analysis Data

All the RDS hard copies are printed out and the measurement results are reviewed by a senior scientist. Edits are noted on the RDS hard copies and then entered into the electronic file. Re-measurement of parameters using the image analysis system is done at this time. When all the edits and re-measurements are complete, the data from all the RDS sheets are exported into bulk data spreadsheet format. The bulk data spreadsheet is compared to the edited RDS sheets

to ensure accuracy. All of the SPC electronic images (.TIF files created by scanning the originals), data sheets, and summary spreadsheet files for each project are copied onto a CD-ROM for archival storage. The original SPC data sheets and images also placed into 3-ring binders for permanent storage in a secure archive room.

16.0 Quality Assurance/Quality Control (QA/QC)

16.1 Field QA/QC

The SPC field QA/QC procedures are as follows: At the beginning of each survey day, the time on the data logger mounted on the SPC is synchronized with the clock on the navigation computer. Each SPC station replicate is identified by the time recorded on the film and on disk along with vessel position. Redundant sample logs are kept by the field crew. Test shots are fired on deck at the beginning of each roll of film to verify that all internal electronic systems are working to design specifications. Spare cameras and charged batteries are carried in the field at all times to insure uninterrupted sample acquisition.

After deployment of the camera at each station, the frame counter is checked to make sure that the requisite number of replicates has been taken. In addition, a prism penetration depth indicator on the camera frame is checked to see that the optical prism has actually penetrated the bottom to a sufficient depth to acquire a profile image. If images have been missed (frame counter indicator) or the penetration depth is insufficient (penetration indicator), additional replicates are taken. All film taken is developed in the field at the end of every survey day to verify successful data acquisition; strict controls are maintained for development temperatures, times, and chemicals to insure consistent density on the film emulsion so as to minimize interpretive error by the computer image analysis system. The film is then visually inspected. Any images that are of insufficient quality for image analysis are noted, and the appropriate station is reoccupied on the next survey day. Experience has shown that this is rarely necessary when the mapping area consists of granular sediments in the medium sand to silt-clay size range.

A first-order QC review of SPC images will be performed to ensure that a sufficient number of images of acceptable quality were obtained. Unacceptable images include:

- Underpenetration/No penetration. Check the number of weights and, if more can be added, revisit the site. If the site looks rocky, penetration may not be possible. Check the other replicates and make a best estimate whether a good image can be collected.
- Overpenetration. Check and reduce the number of weights, possibly use the mud doors, and revisit the site. Some material may be too soft to support the weight of the camera.
- Pull out. The camera prism has started to pull away and is not flush with the sediment when the image is taken; revisit the site.
- Mud Smears. The wiper blade may not be near enough to the prism glass or material may be very sticky. Revisit the site after checking the wiper blade.
- Black image. No strobe; check the strobe and revisit the site.

- Water shot. Revisit the site.

16.2 Image Analysis QA/QC

Upon completion of the image analysis, a senior scientist will conduct a QC review of the measurement data for each image using the RDS hard copy. The QC check following image analysis will flag any potential errors from the image analysis. Some variables that can be incorrectly measured include the maximum grain size, successional stage, or RPD depth. Corrections are noted on the RDS hard copy and edits are made to the electronic files.

Once the RDS hard copies have been corrected and re-measurements made using the image analysis system, the data will be exported into a summary spreadsheet. Variables such as successional stage and OSI measurement need to be examined closely for accuracy.

17.0 Mobilization Checklist

There is no procedural mobilization checklist associated with this SOP.

18.0 References

Diaz, R. J. 1995. Benthic habitat classification of selected areas of Narragansett Bay and the Providence River, Rhode Island. Prepared for U.S. Army Corps of Engineers, Planning Division, Waltham, MA under contract to Normandeau Associates, Bedford, NH.

Germano, J. D. 1983. Infaunal succession in Long Island Sound: Animal-sediment interactions and the effects of predation. Ph. D. dissertation, Yale University, New Haven, CT.

Germano, J. D., and Rhoads D. C. 1984. REMOTS® sediment profiling at the Field Verification Program (FVP) disposal site. pp. 536-544. R. L. Montgomery and J. W. Leach eds. Dredging and Dredged Material Disposal. Volume 1. Am. Soc. Civil Engineers. New York.

Revelas, E. C., Germano, J. D., and Rhoads, D. C. 1987. REMOTS® Reconnaissance of benthic environments. Coastal Zone '87: Proceedings of the Conference, WW Div/ASCE/May 26-29, Seattle, WA, pp. 2069-2083.

Rhoads, D. C., and Germano, J. D. 1982. Characterization of organism-sediment relations using sediment profile imaging: An efficient method of Remote Ecological Monitoring of the Seafloor (REMOTS®™ System). Mar. Ecol. Prog. Ser. 8:115-128.

Rhoads, D. C., and Germano, J. D. 1986. Interpreting long-term changes in benthic community structure: a new protocol. Hydrobiologia 142: 291-308.

Santos, S. L., and Simon, J. L. 1980. Marine soft-bottom community establishment following annual defaunation: Larval or adult recruitment? Mar. Ecol. Prog. Ser. 2:235-241.

Valente, R. M., D. C. Rhoads, J. D. Germano and V. J. Cabelli. 1992. Mapping of benthic enrichment patterns in Narragansett Bay, RI. Estuaries 15:1-17.

Appendix

This section was intentionally left blank.

Standard Operating Procedure (SOP)
For
Sediment Plan View Photography and Analysis

Revision 01
July 24, 2000

Prepared by: Melissa Swanson — Date: June 16, 2000
Marine Staff Scientist

Reviewed by: Ted Turk — Date: June 23, 2000
Senior Scientist

Approved by: Ray Valente — Date: June 26, 2000
Project Quality Assurance Officer

Science Applications International Corporation
221 Third Street
Newport, RI 02840

Table of Contents

1.0 Scope and Applicability

Plan view (i.e., horizontal plane) photographs of approximately 0.3 m^2 of the seafloor surface can be obtained in conjunction with the Sediment Profile Camera (SPC) images. The photographs are acquired with a Photosea 1000a 35 mm Underwater Camera System and a Photosea 1500s Strobe Light attached to the SPC chassis. The photographs are taken immediately prior to the landing of the chassis, providing an undisturbed record of the sediments before penetration of the SPC prism. Once the SPC chassis is lifted above the sediments, the Photosea camera system automatically cycles the film and recharges the strobe in preparation for the next photograph. In this manner, a corresponding plan view photograph is obtained for each SPC image acquired.

2.0 Summary of Method

This SOP defines the methods and procedures to be followed to collect plan view images, plan view system maintenance and troubleshooting. The photographs are acquired with a Photosea 1000a 35 mm Underwater Camera System and a Photosea 1500s Strobe Light attached to the SPC chassis. The system has a rated depth of 2000 meters.

3.0 Definitions

- SPC-Sediment Profile Camera. An underwater camera system that provides a cross-section photograph of surface and near surface sediment to determine sediment grain size, sedimentary fabric, benthic infauna and physical and biological processes on 35mm slides.
- SPC Chassis-Stainless steel SPC frame to which the plan view camera and strobe are mounted.
- JOBO-Film processing unit. A mobile film processing unit that is used to develop the 35mm images of the SPC and plan view cameras.

4.0 Health and Safety Warnings

The plan view camera is attached to the sediment profile camera which is a heavy piece of sampling equipment. The operator must use caution when deploying and retrieving this gear, especially under adverse weather conditions. Proper safety equipment (hard hat, safety vest, steel-toed boots/shoes) are worn by all personnel operating the camera. Under adverse weather conditions, tag lines are used to secure the camera during deployment and retrieval.

Do not look directly at the Xenon bulb when activating the strobe. The light is very intense and can cause severe eye damage.

5.0 Cautions

Gassing is not normally a problem with sealed NiCad batteries. However, the cases for the strobe and camera must be cracked open during charging to prevent gassing in the event of a malfunction.

The camera display must be turned off after setting the data chamber values. If left on the display will expose a red band to be along the end of each image and make image identification difficult.

Turn camera and strobe off when bringing assembly on board or during long transit periods. The trigger is very sensitive and additional images will be taken if the boat is rolling and the shackle is bouncing around.

Tie safety lines from the camera and strobe to the SPC chassis in case of bracket failure.

Care must be taken when cleaning the threads on the camera and strobe. Dirt in the threads will cause binding or galling and make it difficult to open or close housings. In addition care must be taken to avoid cross threading the housings when closing the camera and/or strobe.

6.0 Interferences

Condensation on the plan view camera lens can occur while changing film when the camera body is colder than ambient air temperature. Film must be changed quickly to help minimize condensation. Blowing nitrogen gas into the camera body chamber prior to sealing helps to reduce condensation.

7.0 Personnel Qualifications

Cruise Leader/Chief Scientist: The Cruise Leader/Chief Scientist is responsible for ensuring that proper procedures are followed by all field personnel in conducting plan view sampling as well as all applicable field quality assurance procedures.

Field Scientist: The Field Scientists are responsible for operating the plan view camera, maintaining all field notes and observations, navigation of the vessel to the desired sampling location, and ensuring that proper plan view sampling procedures are followed.

Any individual who will be maintaining and operating the plan view camera system and processing plan view image film should be trained in these operations. All individuals operating the plan view camera system will be readily familiar with the technical and operational aspects of the equipment as specified in the operations manuals. All

individuals processing plan view image film will be readily familiar with the technical and operational aspects of the processing equipment as specified in the operation manual.

8.0 Apparatus and Materials

- Photosea 1000a 35 mm Underwater Camera
- Photosea 1500s Strobe Light
- Synchronized camera and strobe trigger assembly
- ASA 200 slide film, bulk rolls
- Sediment Profile Camera chassis
- Winch and hydrowire
- Swivel
- Field notebooks/sampling logs
- Navigation system
- Plan view tool kit with stainless hardware spares

9.0 Instrument or Method Calibration

Bench Testing Plan View Camera System

9.1 Camera Check

The camera switch should be in the "off" position. Remove the camera mechanism from the housing. Remove the magazine cover by unscrewing the cover pin and lifting off the cover. Turn the switch to "on". When the camera is first turned on it will normally advance through one cycle. Without film in the unit this cycle will take approximately two to three seconds and the interlock light will be "on" for approximately one second. Camera can now be tested by pushing the "test" switch on the bottom of the camera.

9.2 Data Chamber Check

Switch the camera "on" and turn the data chamber switch "on" using the tip of a pencil or pen. The data will now be visible through the data chamber window. Each time "test" is pushed the frame counter value should increase by one. Turn data chamber and display switches "off" or the camera batteries will be discharged.

The data chamber allows the time of day, frame number, and a 2-digit alpha/numeric code to be exposed onto each image. Detailed instructions for setting the data chamber are given in the manual.

9.3 Strobe Check

Switch the strobe to the "off" position. Charge battery for 12 hours. Switch strobe to "on". Test strobe by pushing the "test" switch. Do not look directly at the Xenon bulb when activating the strobe. The light is very intense and can cause severe eye damage. Test the strobe several times to ensure it is functioning properly.

9.4 Plan View System Test

After the camera and strobe have been independently tested, connect the camera and strobe using the trigger harness. Clean the trigger contacts with a pencil eraser and lubricate with dielectric silicone lubricant. Turn the camera and strobe "on". Using the trigger test the complete system. The strobe should flash and the camera should advance.

10.0 Sample Collection, Handling and Preservation

10.1 Deployment of Plan View Camera

Mobilization and Installation of Plan View Camera

- Charge camera and strobe batteries for a minimum of 4 hours (8-14 hours is preferred; loosen cases before charging and insert charge plug on left side of socket.)
- Install camera and strobe brackets on SPC chassis.
- Tape wiring harness to SPC chassis with electrical and duct tape.
- Install trigger and hose clamp conduit to SPC chassis, being careful to adjust height and avoid hanging nicopress fitting of the trigger string on conduit.
- Weight trigger string with several shackles.
- Set camera lens controls: F-stop to 11, focus to 2.5 feet (0.77 meters).
- Turn data chamber on.
- Set digital display to zero for frame count by pushing the reset switch (3 digits).
- Set digital display to days or ID (2 digits).
- Set digital display to 24-hour time (4 digits).
- Set display to off.
- Load camera with film in canister (see below).
- Clean O-rings and lands and regrease both.
- Test fire camera with "test" button to release shutter and advance film.
- Seal case by hand and secure with strap wrenches.
- Install camera and strobe in brackets and orient to proper angle for focal length.
- Install wiring harness connectors to camera, strobe, and trigger.

- Turn on both strobe and camera and test fire both with trigger holding paper with appropriate SPC roll number and date to record SPC roll number.
- Turn off camera and strobe.

Operate Plan View Camera

- Turn on camera and strobe and test fire system with trigger holding paper with appropriate SPC roll number and date to correspond to SPC roll number.
- Deploy SPC chassis to seafloor.
- Recover and repeat cycle as needed (250 frame canister will last approximately six 36 exposure rolls of SPC film).
- Change out strobe at midday with alternate charged unit, and replace film canister after approximately 6 rolls of SPC film.

Load Film

- Place take up spool on film winder and adjust counter to “250”.
- Place winder, spool, cassette, can of bulk roll of film, electrical tape, and scissors in black bag and zip closed.
- Inside bag remove unexposed film from canister and install on winder (trim corners of leading end to fit into slot on spool.
- Inside bag wind 250 frames onto spool.
- Cut film and replace remaining film into bulk film can and seal with electrical tape.
- Place full spool into cassette and close gate (leading edge of film should emerge clockwise from closed gate of cassette).
- Remove all from black bag and open film chamber hatch on camera.
- Insert cassette on right-hand spindle and thread film between film perforation counter and film guide posts.
- Remove film pressure plate and thread film against shutter port and around from film guide posts, careful to fit film edges at shutter port ledges.
- Attach film to empty take up spool for clockwise feed, and insert spool on left hand spindle.
- Advance film by turning on camera and activating test button.
- Replace film pressure plate, replace chamber cover, and open cassette gate.

Remove Exposed Film

- Place camera in black bag with empty bulk roll film can, scissors and electrical tape.
- Inside bag close cassette gate with chamber cover knob.
- Inside bag remove film chamber cover and cut film near shutter sprocket counter.
- Remove film pressure plate and take up spool.
- Unwind film from take up spool and place in empty bulk roll film can. Seal film can with electrical tape.
- Remove all from bag.

Demobilize Plan View Camera

- Rinse camera and strobe with fresh water.
- Remove camera and strobe from brackets.
- Remove trigger, string, wiring harness and brackets from chassis.

10.2 Processing Plan View Film

Exposed film from the plan view camera must be stored in a cool, secure location prior to processing. Before processing film ensure the reels, tank, light trap and lid are completely dry.

Into black bag place:

- Film to be processed
- Reels
- Tank with light trap (center tube)
- Lid for tank
- Scissors
- Electrical tape

The plan view film is spooled into 250 frame lengths which corresponds to approximately six 36 exposure rolls. The reels can hold approximately 40 frames. Cut the film end square and spool onto the reel. When the reel is full, cut the film square and continue spooling film onto another reel. Repeat until all exposed film is spooled onto reels. Minimize finger contact with the film surfaces, touch only the outer edges. Once the film is on the reel put reel on light trap tube. After all the film is on reels and light trap tube, place into tank, flange end of the light trap in first. Snap lid onto tank. Secure lid to tank with electrical tape. Open dark bag, clean out garbage, remove the tank and check electrical tape. If tape is too bulky the tank will not fit into the JOBO properly.

The JOBO processor has a temperature bath and a motor to rotate the tank during development. A magnet at the bottom of the tank sticks to a magnet on the JOBO motor. The motor rotates continuously until the power is shut off. An adjustable heater keeps the water bath at constant temperature; there are positions for the processing chemicals in the water bath. The JOBO is stored in a large cooler for easy transport and in the event of shipboard processing will contain spills of the temperature bath.

The processing chemicals used are for an E-6 three bath plus process, one liter mix. For specific information regarding temperatures and dilutions, refer to kit instructions. A one-liter kit will process 12 rolls of film. Processing times will increase with the number of rolls processed. See instructions for details. Fresh chemicals must be mixed for each new survey unless they are less than 7 days old, have more than 3 rolls of processing left, and were stored in a cool dark place. When mixing fresh chemicals, pre-rinse storage and measuring containers three times with clean, warm to hot water before using.

Measure water into storage containers, then add the concentrated chemicals. Warm water should be used, 68-104° F (20-40° C). If mixing immediately prior to film processing, use water about 95° F to minimize heating time in the JOBO temperature bath. Processing temperature is 100° F (38° C). If using a knife or scissors to puncture the seal on the concentrated chemical bottles, wash between chemicals to avoid cross contamination. Cap chemicals tightly and agitate end over end 10 times to mix.

Prepare the JOBO processor by filling the water bath with warm water, as near to 95-98° F as possible while still being less than 100° F. The JOBO heater will continue heating the water and maintain a constant temperature during processing. The chemical containers sit in slots in the JOBO temperature bath during processing to maintain constant temperature.

Adding chemicals to the tank must be done quickly and JOBO rotation started immediately. Follow processing times listed in chemical instructions. After the bleach-fix the film is no longer light sensitive. A safe, clean, dust free area is needed for the film to dry. Once the film has been through the stabilizing bath, remove the reels from the tank and carefully remove the film from the reels. While the film is wet the emulsion is very soft and very susceptible to damage. The emulsion side is opposite the shiny plastic side. Hang the film overnight to dry. Medium sized binder clips at the bottom help keep the film hanging straight while drying. After hanging film to dry, all the processing equipment must be rinsed thoroughly and dried. Cross contamination of future rolls of film may occur if tanks and reels are not properly cleaned.

After the film is dry images can be quality checked. By matching the time in the image with that in the log book the image station and replicate can be determined. Three replicates are taken at each station and a minimum of two must be of good quality. Less than two means the site should be revisited. Unacceptable images include:

- Obscured. Due to vegetation or suspended sediment. If the site has abundant vegetation and unobscured image may not be possible. Check the other replicates and make a best estimate whether a good image can be collected.
- Black image. No strobe; check the strobe and revisit the site.
- Water shot. Revisit the site.

11.0 Sample Preparation and Analysis

11.1 Slide Mounting and Labeling

After processing the images need to be mounted as slides. The slide mounter uses 2 "C" cell batteries. Cut the film on the frame line after the last data image. With the raised side of the mounter to the right and the Hama DSR label facing the operator, slide the film in from the left side. The image should be emulsion side down, shiny plastic side up, and the bottom of the image toward the mount. In this configuration the image time stamp will be in the lower right corner. Snap a mount into place on the raised portion of the mounter with the slotted or opening side up and pointing towards the film. Slide the moving part, which will move the film, towards the mount until the image is visible inside the mount. Taking care to ensure the frame line is under the cutting blade, cut the film. It is an easy mistake to cut the film in the water portion of the image particularly if there is sand stuck above the wiper blade. Be very certain that the frame line is in the cutting position or data could be lost. All data should be mounted and labeled, including the images deemed unacceptable for analysis.

Once all the images are mounted they are ready to be labeled. Using the log book time and the imprinted time on the image, identify the station and replicate. In the upper left corner write the survey identifier. In the upper right corner write the date the image was taken. In the lower left corner write the station identifier and replicate. In the lower right corner write the time the image was taken from the image itself, <u>not</u> the log book time. Slides are stored in plastic binder pages.

11.2 Plan View Image Analysis

The purpose of the plan view image analysis is to supplement the more detailed and comprehensive SPC characterization of the seafloor. The plan view analysis consists of qualitative descriptions of key sediment characteristics (e.g., sediment type, bedforms and biological features) based on careful scrutiny of projected 35 mm slides. Since the surface sediment descriptions are based on visual observations and therefore are somewhat subjective, only the obvious presence of rock, gravel, sand and/or fines can be noted. Likewise, the presence of shell debris and any evidence of epifaunal or infaunal organisms (e.g., tubes, burrow openings, etc.) can be recorded. Recent dredged material can be evidenced from black, grey or rust-colored deposits of poorly sorted or overconsolidated sediments. The presence of dredged material from past disposal can sometimes be indicated by

angular rocks and/or anthropogenic materials. An estimation of wave energy can be determined by the presence of ripples in sand and/or deposits of fine-grained material. Fine-grained sediments tend to be winnowed away in higher energy environments. Higher energy environments can also cause ripples in sandy substrates. A scale bar is not present in the photographs; however, each photograph covers an area of seafloor measuring roughly 0.48 m x 0.71 m (roughly 0.34 m^2).

12.0 Trouble Shooting

12.1 Strobe

Symptom: Strobe is completely dead ("Recharge" LED does not light).
Solution: Check for discharged battery. Check for blown fuse. Check oscillator output.

Symptom: Strobe charges and shuts off ("Recharge" light goes out), but will not fire when "Test" switch is pushed.
Solution: Check voltage across tube is 1050V (at full power).

12.2 Camera

Symptom: Camera completely dead.
Solution: Check for discharged battery. Check for blown fuse.

Symptom: Blown fuse.
Solution: Check for internal short to ground.

Symptom: Shutter will not activate.
Solution: Check to see that shutter cocking motor is working. Remove lens plate assembly to see if solenoid is working.

Symptom: Film jams.
Solution: Check to see if magazine is clear of obstructions. Be sure cassette is installed properly (index pin in rear plate). Be sure top plate "cassette opening" mechanism is operating properly.

Symptom: Film not advancing properly.
Solution: Check operation of film sensor. Check film advance adjustment (see manual).

13.0 Data Acquisition and, Calculations and Data Reduction

13.1 Plan View Data Review and Data Reporting

At the end of each survey day the film of the acquired images is processed. When the film is dry the images are reviewed and stations requiring re-sampling are noted. After the survey is complete and the slides are mounted and labeled, the images are analyzed.

During image analysis, the various parameters are measured, and the data for each image are stored as a line item within a spreadsheet file. Upon completion of analyses, the spreadsheet is printed out and reviewed with the slides by a senior scientist. Edits are noted on the hard copy and then entered into the electronic file. The plan view images are scanned to create electronic files in .TIF format. An archive CD is created to store all the image files and the plan view data spreadsheet file. Data products (tables and maps) are created from the data spreadsheet. The original images and edited hard copy spreadsheet are stored in a binder in an archive room.

14.0 Computer Hardware and Software

During image analysis the data for each image is stored as a line item within a spreadsheet file. Upon completion of analyses, the spreadsheet is printed out and reviewed with the slides by a senior scientist. Edits are noted on the hard copy and then entered into the electronic file. The plan view images are scanned to create electronic files in .TIF format. An archive CD is created to store all the image files, and plan view data spreadsheet file.

15.0 Data Management and Records Management

15.1 Navigation Data

A laptop personal computer is used to display the navigation data and to store it on hard disk. At the end of each day of survey the daily navigation data is copied onto diskette.

15.2 Field Data

During survey operations, exposed rolls of 35 mm film from the plan view camera will be carefully marked according to: project name, date, time, serial number of the camera, and station numbers surveyed. Roll number and all pertinent information will be entered on the appropriate chain of custody (COC) form. At the end of each day of survey operations, film rolls will be transferred to the person responsible for shore-based data processing.

Field Logs

Documentation associated with plan view imaging consists of field logs, notes and narratives associated with data processing, review, and interpretation. The log will be used to document all sampling and data recording events, as well as other significant activities or problems encountered during survey operations. Maintenance and custody of the log will be the responsibility of the Field Leader. Upon completion of the survey activities, the log will be provided to the SAIC Project Manager.

If a significant deviation from the Field Sampling Plan is necessary, the field leader aboard the survey vessel is responsible for noting such deviations in the field log, and notifying the SAIC Project Manager as soon as possible (e.g., via a telephone call to shore during the survey activities). It will be the responsibility of the SAIC Project Manager to contact the Project Manager to discuss the deviations and potential alternatives/corrective actions.

Rules Governing the Use of Logbooks

- Bound logbooks with pre-numbered pages are the preferred record-keeping forms. Loose sheets are not used unless permanently affixed to the logbooks.
- Field logbooks should contain waterproof paper.
- Only assigned laboratory notebooks or logbooks are used for record keeping (e.g., Instrument Run logbook, Maintenance logbook, Standards logbook, etc.).

- All writing must be legible and shall be completed in water-resistant ink. All numbers must be clear. Corrections should be made by drawing one line through the incorrect entry, entering the correct information, initialing, and dating the change.
- Complete information should be entered so that in an examination, it can be determined what was done, when, and what the results were.
- If any data are determined to be invalid, reasons are indicated.
- All relevant information is included (e.g., the manufacturer and lot number of a chemical, the specific procedure used for sample preparation and analysis, instrumental conditions, etc.).
- When work is continued in another notebook or logbook, the number of the first notebook is written in the first page of the second notebook and vice-versa.

Corrections to Documentation

If errors or omissions in the field logs or sample documentation records are identified by project personnel involved with the survey, these occurrences will be communicated to both the SAIC Project Manager and the QA/QC Officer for the project. The need for any significant corrections will first be documented in writing, then corrections will be made in red ink on the original logs or records. Additionally, corrections will be dated and signed by the person affecting the change.

The SAIC Project Manager will be responsible for security of all field records and project data/information acquired during survey operations. Originals of Logs and data records will be maintained in a secure storage facility at SAIC's Newport, Rhode Island, office. Additionally, back-up copies of all digital data will be stored on magnetic medium in an appropriate storage area. Processed data will be maintained in the project Geographic Information System, and frequent (i.e., daily) backups of the data archive will be part of the routine procedure for maintenance of the data system.

15.3 Plan View Image Analysis Data

The plan view data spreadsheet is printed in hard copy and the measurement results are reviewed by a senior scientist. Edits are noted on the hard copy and then entered into the electronic file. All of the plan view electronic images (.TIF files created by scanning the originals) and data spreadsheet file for each project are copied onto a CD-ROM for archival storage. The original images and edited hard copy spreadsheet are placed in a 3-ring binder binders for permanent storage in a secure archive room.

16.0 Quality Assurance/Quality Control (QA/QC)

Field QA/QC

The plan view field QA/QC procedures are as follows: At the beginning of each survey day, the time on the plan view camera is synchronized with the clock on the navigation computer. Each plan view station replicate is identified by the time recorded on the film and on disk along with vessel position. Redundant sample logs are kept by the field crew. Test shots are fired on deck at the beginning of each roll of SPC film to verify that all internal electronic systems are working to design specifications. A spare cameras and strobe are carried in the field at all times to insure uninterrupted sample acquisition.

All film taken is developed in the field at the end of every survey day to verify successful data acquisition; strict controls are maintained for development temperatures, times, and chemicals to insure consistent density on the film emulsion so as to minimize interpretive error by the computer image analysis system. The film is then visually inspected. Any images that are of insufficient quality for image analysis are noted, and the appropriate station is reoccupied on the next survey day. Experience has shown that this is rarely necessary when the mapping area consists of granular sediments in the medium sand to silt-clay size range.

A first-order QC review of plan view images will be performed to ensure that a sufficient number of images of acceptable quality were obtained. Unacceptable images include:

- Obscured. Due to vegetation or suspended sediment. If the site has abundant vegetation an unobscured image may not be possible. Check the other replicates and make a best estimate whether a good image can be collected.
- Black image. No strobe; check the strobe and revisit the site.
- Water shot. Revisit the site.

Image Analysis QA/QC

Upon completion of the image analysis, a senior scientist will conduct a QC review of the data for each image using the spreadsheet hard copy. The QC check following image analysis will flag any potential errors from the image analysis. Corrections are noted on the hard copy and edits are made to the electronic file.

17.0 Checklists

Plan View Camera Pre-Deployment Checklist

- Charged batteries
- Film loaded
- Film canister opened
- Data chamber "on"
- Display "off" (display "on" only for checking the settings)
- Time synchronized with navigation computer
- Counter reset to zero and reset switch turned to "off" position
- Photograph time interval set properly
  - ❖ Thumbwheel to "1" or "2"
  - ❖ Turn thumbwheel to "0" and allow unit to take picture
  - ❖ Turn thumbwheel to appropriate time interval. Note for 6 hour interval, the wheel must be on "4". This different that noted within the manual.
- F-stop set to "11"
- Focus set to 2 feet (75% of the actual target-to-camera distance)
- O-ring cleaned and greased
- Housing threads cleaned and greased
- Camera on Auto
- Strobe on Auto
- Units purged with nitrogen
- Camera housing completely closed
- Strobe housing completely closed
- Trigger harness properly cleaned, regreased, and secured in position
- Camera power "on"
- Strobe power "on"

18.0 References

Photosea® Systems Inc. Manual for Photosea® 1500s, Photosea® 1500sx Strobe Lights. 10 May 1982.

Photosea® Systems Inc. Manual for Photosea® 1000A 35 mm Underwater Camera System. 1 December 1982.

Appendix

This section was intentionally left blank.

Standard Operating Procedure (SOP)
For
Current Meter and OBS Measurements
Using Bottom-Moored Arrays

Revision 01
July 24, 2000

Prepared by: Jim Singer/Steve Pace — Date: June 16, 2000
Oceanographer/ADISS Engineer

Reviewed by: Ted Turk — Date: June 23, 2000
Senior Scientist

Approved by: Ray Valente — Date: June 26, 2000
Project Quality Assurance Officer

Science Applications International Corporation
221 Third Street
Newport, RI 02840

Table of Contents

1.0 Scope and Applicability

On the Palos Verdes Pilot Capping Project monitoring program, acoustic current and Optical Back Scatter (OBS) sensors will be used at the four pilot capping cells to assess the extent of the surge from sediment placement. The instruments will be installed on five bottom-mounted moorings, and deployed down slope from each planned placement at distances of 75, 150 and 250 meters and up slope at 75 and 150 meters.

Acoustic current sensors are used to measure the speed, direction, and temperature of ocean currents. Current speeds are measured in cm/s with a maximum range from 0 up to 1000 cm/s. Current direction is measured in degrees magnetic from 0 to 360 degrees and temperature is measured in degrees Celsius from -5 to 40 degrees.

OBS sensors are used to measure the turbidity of water as measured in turbidity units with a standard maximum range from 0 to 2000 turbidity units. Precise and meaningful conversion of such in-situ measurements to total suspended solids (TSS) is, at best difficult and of questionable validity. This is due to the difficulty of sampling near the in-situ sensor at a specific time as well as the varying size and reflective characteristics of the light scattering particles that pass through the sensor's field of view over time.

2.0 Summary of Method

The Doppler effect is used to measure current velocity. Sound transmitted by the instrument is reflected back to it, off particles in the water as they drift with the current. The resulting frequency shift, with the built in compass, permits determination of water speed and direction.

The detection of scattered light is used to determine turbidity. Infrared light emitted by light emitting diodes in the instrument is reflected off particles in the water back to a photodetector. The amount of scattered light that returns to the detector is proportional to the particle concentration or turbidity in the water. The sensor is adjusted for a consistent response to the Formazin Turbidity Standard which is measured in Formazin Turbidity Units (FTUs).

3.0 Definitions

- ARESS: Automated Resuspension Surveillance System. An integrated system developed by SAIC that simultaneously measures and stores current velocity and turbidity measurement readings.

- Formazin: A chemical solution routinely used as the standard for the calibration of turbidity measuring instruments in NTUs.

- NTU: A Nephelometric Turbidity Unit is equivalent and interchangeable with an FTU. (D&A Instrument Company, March 1991)

- Turbidity: The cloudy appearance of a liquid produced by light scattered from suspended, colloidal, or dissolved matter (D&A Instrument Company, March 1991)

4.0 Health and Safety Warnings

Proper handling and disposal of alkaline and lithium battery packs is required.

Proper handling and disposal of sediments recovered with the instrument mounting frames is required.

Care must be taken to avoid personal injury during ship operations. During deployment and recovery operations, members of the deck crew will be required to wear hard hats and safety vests. During adverse weather conditions, tag lines will be used to maintain control of the instrument package. All ship's equipment (winches, A-frame, etc.) will be operated only by the ship's crew.

5.0 Cautions

- New or partly used battery packs with adequate power reserves should be installed in data logging instruments prior to each deployment. Battery voltages with and without a load should be recorded. This should prevent deployment with a defective "NEW" or excessively "USED" battery.
- Instrument sampling settings must not exceed expected battery life or memory endurance for the planned deployment duration.
- O-ring must be inspected, cleaned and greased whenever the instrument housing is opened.
- Data logging clocks should be set to within one second of CTU (GMT) prior to deployment and the time should be checked again following recovery. Any difference at recovery should be recorded.
- Confirm that the instrument is "ON" prior to deployment.
- Do not deploy the instrument deeper than its rated maximum deployment depth.

6.0 Interferences

The current meter's compass must be far enough away (probably at least six inches) from adjacent steel elements or structures to not be affected by them. A test deployment may be necessary to verify if there is a question. In addition, stainless steel mooring frame elements must be tested to determine whether or not there is a potential compass affect, particularly if an instrument is to be directly attached. Not all stainless steel is non-magnetic.

When deployed, instrument tilt (from the vertical) should not exceed 15 degrees for the RDI Workhorse ADCP, 20 degrees for the Nortek Aquadopp, and 35 degrees for the Aanderaa 3500R Doppler Sensor in order to assure reliable current measurements. Bottom mounting frames with gimbals and buoy mounting approaches can be used in locations where significant bottom slope is considered a problem.

The current sensor should be installed in such a way that it will provide a measurement of unobstructed flow at the measurement site.

Acoustic current meters with similar acoustic frequencies should not be deployed in such a way as to be sampling the same cell of water at the same time.

7.0 Personnel Qualifications

Technical staff should have experience with instruments prior to deployment servicing. This includes test deployments and servicing to become familiar with the aspects of instrument setup and data downloading.

8.0 Apparatus and Materials

8.1 Equipment and Hardware

- ARESS instrument mounting frame and subsurface recovery system.
- Aquadopp instrument mounting frame and subsurface recovery system.
- ADCP instrument mounting frame and subsurface recovery system.
- Trawl Resistant Bottom Mount (TRBM) for RDI Workhorse ADCP (for Optional Task 14).

8.2 Instruments and Supplies

- Three ARESS data logging instrument packages, each consisting of two Aanderaa 3500R Doppler sensors and two Seapoint Turbidity meters (OBS).
- Two Nortek Aquadopp current meters, each with an AquaFin and a D&A OBS-3 sensor.
- Two RDI 300 kHz Workhorse ADCPs (one deployed with one of the ARESS packages and a second deployed on a separate, possibly trawl resistant bottom mount (TRBM) (for Optional Task 14).
- Manuals, test cable, A/C power adapter and battery packs for above instruments.
- Computer with Zip Drive and disks, ARESS, Nortek and RDI application software.
- EdgeTech Model AM200 acoustic releases and EdgeTech Model AMD200 Acoustic Command Transmitter with transducer.
- Benthos Model 866-A acoustic release (for Optional Task 14) and a Benthos Model DS-7000 Transponder Deck Unit with transducer.
- Manuals, battery packs, anodes and release links for EdgeTech and Benthos instruments.
- Volt-ohm meter, O-ring grease, Kim Wipes and miscellaneous tools and supplies.

9.0 Instrument or Method Calibration

All three of the current measuring instruments to be used in this program measure speed based on the speed of sound in water. The Aanderaa 3500R sensor operates with an assumed speed of sound in water of 1500 m/s. The Nortek Aquadopp can be programmed for a particular speed of sound or it can calculate a speed of sound based on a programmed salinity and the measured temperature at the instrument. The RDI Workhorse ADCP calculates a speed of sound based on a programmed salinity and the temperature measured by the instrument. The resulting speed measurements on all three instruments can be corrected for the actual speed of sound in water if temperature and salinity data are available. Salinity data from CTD casts made in the vicinity of the instrument along with temperature data collected by the instrument are adequate to make the appropriate correction.

The Seapoint Turbidity meter and the D&A OBS sensors will be calibrated within two weeks of their first deployment on the PV pilot capping monitoring program. The calibration will be performed using either formazin standards or AMCO AEPA-1 primary turbidity standards certified by U.S. EPA. Procedures for calibration with turbidity standards or sediments are presented in D&A Instrument Company (1991). Essentially, the calibration procedure consists of preparing a serial dilution of a primary turbidity standard, recording the instrument output (voltage) when the sensor is placed in the successive (serial) calibration solutions having a range of NTU values, and generating a calibration curve that allows conversion of instrument voltage to turbidity expressed in NTUs. Following the initial calibration, the calibration stability will be checked prior to each subsequent instrument deployment of the meters, using a mid-range NTU standard. If the meter reading is not within 10% of the known NTU value, the meter will considered out-of-calibration and will be re-calibrated.

10.0 Sample Collection, Handling and Preservation

For TSS samples, refer to Section 10.2 of SOP for Near Bottom Marine Water Collection Using a Rosette Water Sampler Interfaced with a Water Profiling CTD.

11.0 Sample Preparation and Analysis

TSS sample preparation will be performed by a commercial laboratory in accordance to the SOP.

12.0 Trouble Shooting

The Aanderaa 3500R Doppler Sensor contains no user serviceable electronics and must be returned to the manufacturer if it does not operate properly. The ARESS data logger which records the data from the Aanderaa Doppler Sensor and the Seapoint Turbidity meter was developed in-house by SAIC technical staff who have established trouble shooting guidelines for the instrument package.

- The Nortek Aquadopp Operations Manual (Chapter 6) provides trouble shooting procedures.

- The RDI Workhorse Acoustic Doppler Current Profiler Technical Manual (Chapter 6) provides trouble shooting procedures. The manufacturer also provides technical staff via phone and email to support trouble shooting efforts.
- The D&A OBS sensor and the Seapoint Turbidity meter contain no user serviceable electronics and must be returned to the factory if they do not operate properly.

13.0 Data Acquisition, Calculations and Data Reduction

Each of the data logging instruments (ARESS, Nortek Aquadopp/OBS, and RDI Workhorse ADCP) records, in internal memory, data arriving from the various sensors to which it is linked. Data sampling rates and the start-sampling time are programmed into the instrument prior to deployment. ARESS data are collected at 2.5 Hz and Nortek Aquadopp data are collected at 1 Hz. RDI ADCP data are averaged from 30-minute ensembles or more frequently. Actual ADCP sampling rates, horizons and a servicing schedule will be finalized and coordinated with the Project Manager. Following recovery, collected data are downloaded through an RS-232 interface to a computer and stored as raw data files. These files are then converted to engineering units and are plotted using instrument-specific application software. The data are then provided to appropriate technical staff for review.

14.0 Computer Hardware and Software

- A 100 MHz to 400 MHz personal computer running Win95 or Win98 will run the required applications. Faster machines and WinNT machines can cause problems for some of the software packages identified below. An Iomega Zip Drive, a built-in 3 1/2" floppy drive and a CD drive are also required.
- The ARESS processing software, ARESSPro will be used to parse the recorded data and produce the time series plots of current and OBS from the Aanderaa and Seapoint sensors.
- Nortek Aquadopp software.
- RDI Workhorse software which includes a DOS based Workhorse Utilities package (917-6000-00 980601) and a self-contained Workhorse windows version (WinSC Ver 1.18 or more recent).

15.0 Data Management and Records Management

- Data should be downloaded twice from the data logger and reviewed before instrument memory is erased following each recovery. Unique data file names should be applied to each data download.
- Data should be stored in two different locations (i.e., the computer hard drive and on a Zip disk).
- A separate Deployment/Recovery Log must be maintained for each data-recording instrument for each deployment. This log consolidates all relevant information regarding a deployment including time, location, depth, instrument setting, battery voltage, data file names, etc.

- A hard-copy field log will be maintained for bottom-moored array deployment and recovery cruises. This log will document field party participants, significant events (in local time) such as departure and return to dock as well as the time of arrival and departure from the bottom-moored array deployment sites. It will also document any problems or difficulties associated with the operations.

16.0 Quality Assurance/Quality Control (QA/QC)

For each of the data logging current meter instruments (ARESS, Nortek Aquadopp and RDI Workhorse ADCP), there are system checks that are performed prior to deployment, while the instrument is in the shoreside facility or on-board the research vessel and connected to a laptop computer. Predeployment checks include verification of battery connection and power, internal system electronic checks, a check on the delayed start function, and verification of instrument signal (ping) at the specified delayed start time. All predeployment QC checks are recorded on a standardized deployment/retrieval log specific to each instrument (see Appendix to this SOP). If the instrument fails any of the predeployment QC checks, corrective action will involve troubleshooting until the problem is resolved or replacement of the instrument.

During the first few monitoring events, simultaneous (i.e., side-by-side) measurements of current velocity will be obtained with the ARESS Aanderaa Model 3500 current sensors and the Nortek Aquadopp. Following each event, the data will be processed to determine the level of agreement between the two sets of readings. It is expected that the relative percent difference between the simultaneous readings should be less than 20%. Failure of the instruments to demonstrate agreement will result in corrective action. The source(s) of the discrepancy will be identified and eliminated and the side-by-side deployment repeated to verify agreement between the instruments.

For the turbidity measurements using the OBS sensors, the quality control check will consist of a calibration check of each instrument prior to each deployment. Each sensor will be immersed in a standard solution having a known turbidity (expressed in Nephelometric turbidity units or NTUs). The standard will be prepared such that its turbidity level will be roughly in the mid-range of values expected at the deployment locations on the PV Shelf. The instrument reading will be compared with the calibration standard true value. If the meter reading is not within 90% to 110% of the true value, the calibration of the OBS will be checked, adjusted as necessary, and the calibration check performed again prior to instrument deployment.

17.0 Checklists

ARESS Deployment/Recovery Log. (See Appendix)

Nortek Aquadopp/OBS Deployment/Recovery Log (See Appendix)

RDI Workhorse ADCP Deployment/Recovery Log (See Appendix)

18.0 References

Aquadopp Operations Manual, November 15, 1999. Nortek AS, Document No. N3009-100/Rev.:a/16.11.99.

Instruction Manual, OBS-1 & 3, Suspended solids & Turbidity Monitor. D&A Instrument Company, Rev. 3/91.

Seapoint Turbidity Meter User Manual. Seapoint Sensors, Inc., 2/97.

Workhorse Technical Manual, April 1996. RD Instruments, P/N 957-6000-00-April 1996.

Appendix
ARESS DEPLOYMENT/RECOVERY LOG
(PAGE 1 OF 2)

Project:_____ Client: _____

Duration of Deployment

Start Date:_____ End Date:_____ Total Days Deployed:_____

EQUIPMENT CHECKS AND INFO

ARESS Equipment

Pressure Case #:_____ Frame Color:_____

Sensor Positions: DCS S/N: (top)_____ (mid)_____ (bot)_____

OBS S/N: (top)_____ (bot)_____

Other:_____

Main Battery: Positive Volts:_____ Negative Volts:_____

Clock Battery: Volts:_____

Firmware: Version:_____ Sampling Interval:_____ Burst Length:_____

PCMCIA Memory: Capacity:_____ Is it clean? Y / N Is it readable in palmtop? Y / N

TEST: Start Date/Time:_____ End Date/Time: _____ # records recorded:_____

Release Equipment

Buoy ID:_____ S/N:_____ Enable Code:_____ Release Code:_____

Transmit Frequency: _____ Receive Frequency:_____ Fresh Batteries? Y / N

Battery Voltage:_____ Dry-fire Date/Time:_____

Water Depth: _____ Release line length (ft):_____

Pinger Equipment

S/N:_____ Frequency:_____ Fresh Batteries? Y / N

Battery Voltage:_____ Jumper #:_____Test Date/Time:_____

Observed Ping? Y / N

COMMENTS:

ARESS DEPLOYMENT/RECOVERY LOG
(PAGE 2 OF 2)

FIELD OPERATIONS

Deployment

Start Date/Time: _____ Attached Date/Time: _____

In-water Date/Time: _____ On Bottom Date/Time: _____

Latitude:_____ Longitude:_____ Differential Signal? Y / N

GPS System:_____ Antenna Position:_____

GPS Station in use:_____

Recovery

Off Bottom Date/Time_____ On Deck Date/Time: _____

Detach Date/Time: _____ End Date/Time: _____

COMMENTS:

Please Check Here Upon Pod Recovery:____

Date: _____ Initials:_____

NORTEK AQUADOPP W/OBS
DEPLOYMENT/RECOVERY LOG
Version 1.0: 06/19/2000

Project:	**Study Area:**	**Station:**	**Deployment Dates** **From: To:**	
Water Depth	**LAT:**	**LONG:**	**LORAN TDs:**	**LORAN TDs:**

Instrument: NORTEK AQUADOPP W/ D&A OBS	**Serial No.:**	**Parameters:** U,V,T,P	**Instrument Depth** **(Transducer Head):**

FIRMWARE VERSION:_____ Deployment File Name (6 characters): _____

SAMPLING CONFIGURATION:
Measurement Interval (s): _____; Average Interval (s): _____; Measurement Load (%): _____; Blanking Distance (cm): _____
Measurement Cell (cm): _____; Compass Update Rate (s): _____; Speed of Sound: ___ Measured w/psu:_____ or Fixed (m/s):_____
Power Level: (1 / 2 / 3 / 4) Coordinate System: (ENU / XYZ / Beam) (125 Whours / Lith. Battery)
Assumed Duration (days): _____; Battery Utilization (Alk. %): _____ (50 Whours / Alk. Battery)
Memory Required (Mbytes): _____ (78 Mbytes Available) Velocity Precision (cm/s): _____

	Date (GMT)	Time (GMT)
1.0 PREDEPLOYMENT		
1.1 Battery Connected (New/Reused From_____) **Battery Voltage w/o load_____; Battery Voltage w/load_____**		
1.2 System Tests Done: _____ Clock Set to GMT: _____ **Erase Recorder: _____ Available Memory Size_____**	---	---
1.3 Delayed Start Set for:_____		
1.4 Observed Ping #1 (Heard/Detected) (AM Radio)		
Observed Ping (Heard/Detected)		
Observed Ping (Heard/Detected)		
	---	---
2.0 DEPLOYMENT		
2.1 Instrument on Deck		
2.2 Instrument in Water		
2.3 Anchor Deployed		
3.0 RECOVERY		
3.1 Acoustic Release Fired/Released		
3.2 Mooring at Surface		
3.3 Instrument on Deck		
3.4 Observed Ping (Heard/Detected)		
3.5 Data Download: **File Name/Size _____ Baud_____** **File Name/Size _____ Baud_____**		
Clock Fast/Slow by minutes ____ and seconds ____ at Recovery	---	---
Old Battery Voltage w/o load_____; Old Battery Voltage w/load _____		

PREDEPLOYMENT	**DEPLOYMENT**	**RECOVERY**	**P.I. APPROVAL**	**DATA VERIFY**

NOTE: EDT + 4 hrs = GMT
EST + 5 hrs = GMT

RDI WORKHORSE ADCP
DEPLOYMENT/RECOVERY LOG
Version 1.1: 03/31/2000

Project:	**Study Area:**	**Station:**	**Deployment Dates** **From: To:**	
Water Depth	**LAT:**	**LONG:**	**LORAN TDs:**	**LORAN TDs:**

Instrument: RDI 300 KHZ WORKHORSE	**Serial No.:**	**Parameters:** U,V,T	**Instrument Depth** **(Transducer Head):**

FIRMWARE VERSION:_____ Deployment File Name (5 characters): _____

SAMPLING CONFIGURATION: **____Bins; ____m Bin Size; ____Pings per Ensemble; _____ Interval (h:m:s)** **_____Days Deployment Duration; _____m Programmed Transducer Depth** **____m Expected Max Range at _____°C and _____ psu Std. Dev. _____cm/s** **Expected Battery Usage: (_____Whours) (400 Whours Available)** **Expected Storage Required: (_____Mbytes) (10 Mbytes Available)**	**Date (GMT)**	**Time (GMT)**
1.0 PREDEPLOYMENT		
1.1 Battery Connected (New/Reused From_____) **Battery Voltage w/o load_____VDC, w/load_____VDC (600 ohm 5W)**		
1.2 System Tests Done: PA_____ PC1_____ PC2_____ RR_____ TS?_____ **ERASEMEM_____ Available Memory Size_____**	---	---
1.3 Delayed Start Set for:_____ **NOTE: If battery is new, ignore comment: "using a used battery" as is an artifact of "old" software with "new" firmware (Using DOS Software)**		
1.4 Observed Ping #1 (Heard/Detected)		
Observed Ping (Heard/Detected)		
Observed Ping (Heard/Detected)		
1.5 Torque Top 9.6 Newton Meters_____Hot Pepper/Silicon on Transducers_____ **Torque Bot. 7.4 Newton Meters ____ Titanium Bolts_____**	---	---
2.0 DEPLOYMENT		
2.1 Instrument on Deck		
2.2 Instrument in Water		
2.3 Anchor Deployed		
3.0 RECOVERY		
3.1 Acoustic Release Fired/Released		
3.2 Mooring at Surface		
3.3 Instrument on Deck		
3.4 Observed Ping (Heard/Detected)		
Recover_/PATHE:\ ADCP DATA_/B38400 (Example DOS RECOVER Command)		
3.5 Data Download: **File Name/Size _____ Baud_____ Corrections_____** **File Name/Size _____ Baud_____ Corrections_____**		
Clock Fast/Slow by minutes ____ and seconds ____ at Recovery (Use "TS?" in BBTALK)	---	---
Data Viewing Range: _____ Old Battery Voltage w/o load_____ VDC; w/load _____ VDC		

PREDEPLOYMENT	**DEPLOYMENT**	**RECOVERY**	**P.I. APPROVAL**	**DATA VERIFY**

NOTE: EDT + 4 hrs = GMT
EST + 5 hrs = GMT

Standard Operating Procedure (SOP)
For
DF-1000 and ISIS Side Scan Sonar Operations

Revision 01
July 24, 2000

Prepared by: Jason Infantino Date: June 16, 2000
Marine Staff Scientist

Reviewed by: Ted Turk Date: June 23, 2000
Senior Scientist

Approved by: Ray Valente Date: June 26, 2000
Project Quality Assurance Officer

Science Applications International Corporation
221 Third Street
Newport, RI 02840

Table of Contents

1.0 Scope and Applicability

Side Scan Sonar is used to characterize the physical nature of the seafloor within a study area.

2.0 Summary of Method

The side-scan sonar emits an adjustable swath of sound (sonar) from both or either side(s) of a tow fish unit, receives the returned sound reflected by seafloor and submerged objects and decodes the sound to produce a sonic image of the seafloor. This image is then studied to identify geologic features and man-made targets, or subjected to additional processing to produce side scan mosaics.

3.0 Definitions

A schematic diagram of the SAIC sidescan sonar system is provided in Figure 3-1. The system components are defined as follows:

ISIS – The Triton Elics International side scan sonar data acquisition and processing system.

Model DF 1000 Tow fish – A hardware device that houses the transducer arrays of the side scan sonar system.

DCU- Digital Control Unit. The hardware that emits the power needed to produce sonar energy from the transducers. This unit is used for acquiring analog as well as digital surveys.

DCI- Digital Control Interface This is a different type of DCU used when acquiring digital data.

Mosaic- The integration of several side scan sonar data files that are geo-referenced to form a composite image.

Delph Map- Computer program that allows the mosaic process to occur.

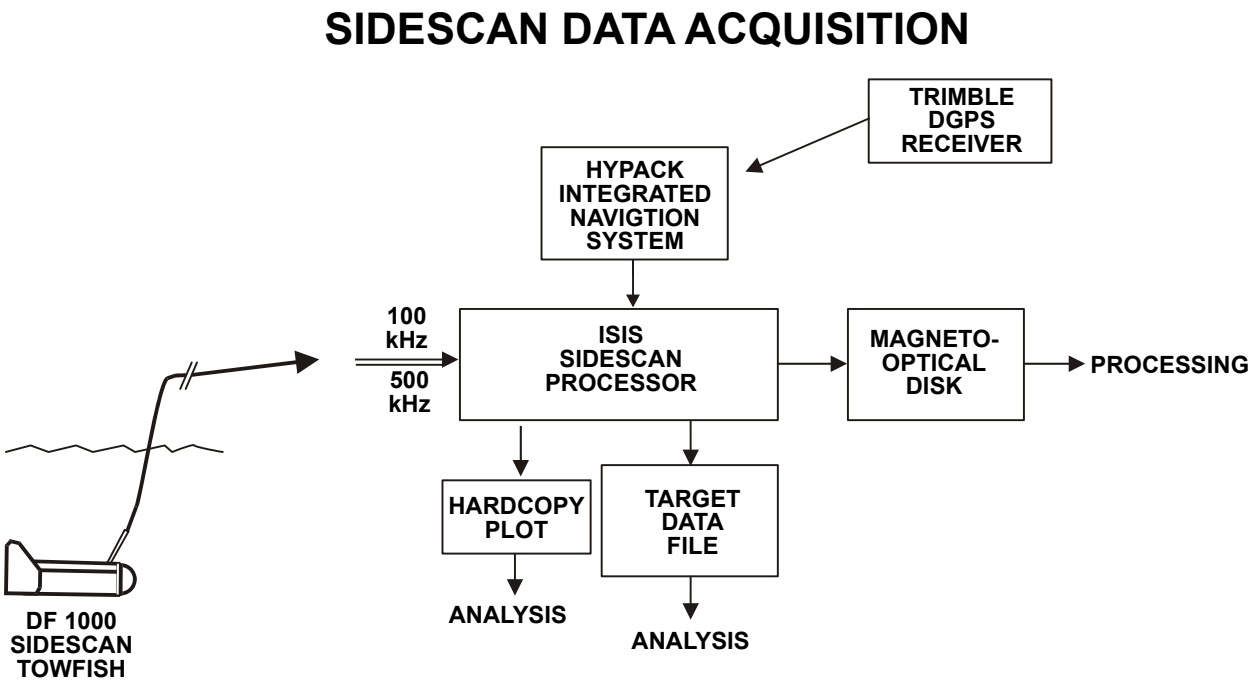

Figure 3-1. Schematic diagram of the SAIC Side-Scan Sonar System.

4.0 Health and Safety Warnings

1) Side scan sonar is an electronically powered instrument and should be treated with common safety awareness related to general electrical usage.

2) The towfish unit should be deployed and recovered with at least two personnel so that excessive weight strain does not cause injury to the handlers.

5.0 Cautions

Make sure that the DCU/DCI trigger is off while the towfish is out of the water for extended periods, it is not good for the transducers to be free pinging in air, as the equipment was designed for marine operations.

Upon completion of survey operations the SAIC crew will run through a demobilization checklist that will ensure that the leased equipment has been packed up with all components. All data files should be backed up before further demobilization is conducted. The data tapes will be transferred to the processing office in an appropriate fashion to keep safe from the elements. The towfish and data cable should be rinsed with fresh water if possible, and the data

cable should be re-coiled or spooled the way that it was received. All cables and peripherals to the DCU/DCI and ISIS system should be accounted for and packed.

6.0 Interferences

No interferences are applicable to this Standard Operating Procedure.

7.0 Personnel Qualifications

There should be two SAIC personnel on deck during towfish deployment and recovery operations, as well as one qualified person supplied by the chartered survey vessel, tending the winch. The person operating the winch should be properly trained on standard winch assisted deployment operations. All deck personnel should be able bodied and have appropriate safety equipment (floatation vest, steel toed boots). One SAIC person should be designated as deck leader and that one person should be responsible for all communications between the winch operator, deck hands, and bridge personnel.

8.0 Apparatus and Materials

Edgetech DF1000 and ISIS Interface:
The DF1000 is a digital Side Scan Sonar model towfish manufactured by Edgetech of Milford, Ma. The typical package of equipment that SAIC uses for surveys includes: 1) DF1000 Towfish, 2) DCU or DCI Power supply 3) ISIS Topside Unit from Triton Elics 4) an optional EPC GP1086 thermal printer to obtain a hard copy of collected data 5) coaxial tow cable (double armored or Kevlar®) and 6) sidescan winch equipped with slip ring (if required).

9.0 Instrument or Method Calibration

Prior to survey operations, SAIC personnel will install all necessary navigation and positioning equipment on the survey vessel. The sonar acquisition system will be installed and data communication interfaces will be tested for proper operation. The towfish will be put through a “rub” test to determine the operational status of the integrated transducers. The rub test consists of having a hand passed over the port transducer while a person watching the acquisition system determines if a signal is picked up on the port channel display. The starboard transducer is tested the same way, completing the rub test. Offset distances between the towpoint and the GPS position antenna will be determined to facilitate accurate calculation of towfish position during survey operations.

10.0 Sample Collection, Handling and Preservation

The Towfish emits sonic pulses at either 100 kHz or 500 kHz, or can collect using both frequencies simultaneously. A data cable connects directly to the towfish while the other end is connected to the digital control unit (DCU) or digital control interface (DCI) in the dry lab facility of a survey vessel. The DCU/DCI is responsible for emitting the power signals to the towfish via the data cable. The DCU unit also allows the operator to select the frequencies (100 or 500 kHz) and set the range of the sonar returns stored during collection. The DCI interface to the ISIS PC allows the user to control the collection frequencies and ranges within the ISIS software. The data cable's length is dependent on the depth of the survey area. If a long cable is needed a winch is highly recommended, in which case a slip ring for the winch will be required. After the data cable is coiled on the winch spool, the end that would connect to the DCU/DCI is connected to the inside of the slip ring. The slip ring should fasten to the side of the winch and serves the sole purpose of allowing the cable to be payed in and out without turning and binding the end of the cable that is attached to the slip ring. The DCU/DCI should have a BNC data cable that comes out of the DCU/DCI trigger port and connects to the slip ring, completing the towfish to DCU/DCI interface.

11.0 Sample Preparation and Analysis

This section is not applicable to this Standard Operating Procedure.

12.0 Trouble Shooting

1) If any technical problems arise with the DF-1000 towfish, refer to the included user manual. If problems persist then call the lease company's technical support number.

2) If any technical problems arise with the ISIS topside unit, refer to the included user manual. If problems persist then call the lease company's technical support number.

13.0 Data Acquisition and, Calculations and Data Reduction

13.1 ISIS Data Acquisition

Assuming that the complete system is connected properly, including navigational integration, the user is ready to start collecting "online" data.

1) Perform a final rub test of the towfish transducers on deck before deploying the towfish unit. Deploy the towfish into the water and power up the side scan acquisition equipment.

2) Run a survey test line by having the vessel transit in a straight line at a speed comparable to what the survey will be run at (~ 4.0 knots). Put out enough cable to compensate for the constant speed and water depth. If the survey is in an area with changing topographic relief there is an increased concern about hitting the seafloor with the towfish. This can be avoided with the use of bottom tracking on the side scan data display. It is also good practice to familiarize yourself with the topography of the survey area ahead of time if possible (NOAA nautical charts). It may be necessary in some areas to have a person manning the winch at all times to make necessary cable in/out changes depending on the water depth.

3) Start collecting the data in ISIS. After ISIS is started a main window (where the user can select different tasks) is displayed. There are two types of modes in ISIS: playback and recording. Under the file menu choose "record setup", there will be three boxes to choose from: "Sonar Setup", "Serial Ports" and "File Format".

4)

- In "Sonar Setup" choose "Edgetech DF1000/DCU" or "Edgetech DF1000/DCI" depending on which is in use and click "ok".
- In "serial port" setup choose "COM1" to "on" and select "NMEA0183", then click "ok".
- Lastly click "File format" and choose which of the formats you want the side scan data to be stored as (.XTF, Q-MIPS, or SEG-Y).
- Once all of those settings have been adjusted for the three box options hit "ok".
- Click on "view" and select the "layback" text. A box should appear, click the "apply layback" button and then enter the layback (how much cable is payed out) manually in meters. Note that the cable layback will probably change often during the survey. Each time the cable is payed in or out, the layback value needs to be adjusted so that the corrections can be made to the navigation in real-time.
- Under "window" select "parameter window", at the far right of this window a current file area is displayed. Here is where your file names are shown and also where the files are being saved to as well. It is important to make sure there is enough hard drive space available for a full survey day's worth of data. At the completion of the day the raw electronic data should be transferred to a backup media source.
- Hit the "start recording" button from the file main menu and choose the directory, then type in the desired file name for your data. Isis has a default naming convention as well, if you have no preference, but you should at least know where your data is being saved and how much space you have available. Now the data should be appearing in the main window in a waterfall display. The user can now fine-tune the picture with TVG and GAIN adjustments. Upon completion of the survey day the towfish needs to be recovered and secured before transit. *Backup the data, at the end of the survey day during the transit to port.*

13.2 ISIS Post Process Mosaicing

The shore facility (office) is likely the place where post processing will occur. This allows access to in-house networking capabilities that include hard disk space for storage of the newly acquired files. Set up the ISIS system with the chassis, monitor, keyboard, mouse and hardkey dongle. There will be no need for the data cable connections that were described for field operations. Start ISIS and from the main window choose "tools" and click the "coverage map and mosaic" key. This option will allow user to make a visual map of the ship track and optionally of the sonar coverage that was collected. The general steps for adding one or more lines to the coverage map are:

1. Set up your XTF or DAT file for mosaicing
2. Replay the data which extracts the navigation information
3. Smooth the navigation data (click option)
4. Create the empty matrix file
5. Fill the matrix file with sonar imagery
6. Display, print and export (Geo-referenced TIFF) imagery. Another program called Delph Map is needed for step 6.

In the course of making a coverage map, ISIS needs to know the input projection and Datum used in recording the survey data. Set this up correctly because ISIS does have a default setting that could skew the data if it is not the Datum used for the survey. When replaying a file to extract the navigation data, you will have the option to perform operation on a single line or on a range of lines. If the single line option is used, you will later be able to select which lines will overlay other lines in Delph Map. This option gives you more control in the manipulation of the final mosaic. To replay the data as a coverage map choose "coverage map" then "Mosaic/DTM". Replay the lines you wish to have included in the mosaic. You will begin to see the lines you are playing back start to fill the coverage window. No mosaic data is being written yet. While the lines are replaying, you can use the TVG menu to fine-tune the data for best results and also check to see that the bottom is being tracked correctly. Once all lines have been replayed, save the navigation data using the "file" "save coverage points" option in coverage map.

Now the data needs to be smoothed so that anomalous points may be removed from the raw navigation. To smooth the navigation data, choose "nav" "smooth navigation" in the coverage window menu. Select a speed range and number of points to smooth, then click "smooth", then "close". Isis will prompt you to lock the coverage map so that new points cannot be added to it; click "yes".

An empty mosaic file needs to be created now in the coverage map. In coverage map choose "moasic/DTM" then "Delph Mosaic". Now a window will be opened where the user needs to enter the map bounds of the survey area or mosaic area. Follow the prompts to make sure the projection is correct for the mosaic area.

Filling the mosaic file is the last step on the ISIS side of the mosaicing process before the mosaic is created. Select the first line to be added to the mosaic from the original data. In the main window you will see the line being played back to you; make sure it is in the format that you want. Make sure the "correct for Slant-Range" box is checked in the waterfall display dialog box. When all files have been replayed, click "quit mosaicing" in the Delph Mosaic dialog box. You now have created a filled mosaic file, which is ready for use in Delph Map.

Delph map is a fairly intuitive program, so the process is not explained in great detail here. Open Delph Map and select add layer; it will ask you to navigate to the location of the files you want displayed. Once you select a file, it will appear in the mosaic window. This image is treated as a separate layer if you mosaiced one file at a time in ISIS. The bonus to this is that you can select which line is on top. To insert additional lines, clicks the "add new layer" button and repeat the process. Once all of the lines have been entered into Delph Map, a mosaic of the collected data should be displayed on the monitor. It is now possible to save or export the file as a geo-referenced TIFF file.

14.0 Computer Hardware and Software

ISIS, produced by Triton Elics is a PC-based system used to digitally store digital or analog side scan sonar data. In addition, ISIS is a powerful post-processing tool that permits the development of high-resolution digital mosaics of side scan sonar data. The ISIS system is installed on a computer package, consisting of two primary pieces of hardware: a computer chassis, and a high-resolution monitor. Smaller, peripheral items include the power and monitor cables, keyboard, HardLock dongle (parallel port connector), mouse, and signal interface hardware (small silver box). ISIS will not properly function without the hardlock in place.

After ISIS is set up the connections are made between the DCU (or DCI depending on what is used) and ISIS computer. From the DCU, the BNC connectors from the starboard (right towfish transducer) and from the port (left towfish transducer) channels are connected to the signal interface box at the respective ports. There should be 4 ports in total, a starboard and port for each frequency of 100 kHz or 500 kHz. It is up to the operators to which ports are needed, depending on whether or not 100kHz or 500 kHz data is needed. It is to hook up all 4 ports to lessen any potential confusion later in the survey. The ISIS signal interface is connected to the ISIS computer chassis at the port labeled "analog". After all of the connections are made the system is fundamentally ready to collect side scan data. A rub test on both the starboard and port channels of the towfish should be executed while the fish is on the deck. Make sure that there is a good picture on both channels and that no apparent noise is present. The safety link and data cable connection should also be inspected at the same time as the rub test. It is good practice to apply a dime-sized dab of DC4 grease to the side scan-data cable interface.

If a Digital Control Interface (DCI) is used instead of a DCU, then the following connections are made for the ISIS setup. One side of the DCI has a coax cable BNC that runs to the slip ring (making a connection with the towfish). The other side of the DCI has a BNC connector that goes directly to the back of the PC on which ISIS is installed. In the back of the PC there will be a BNC interface to receive the connection; it will be labeled “T1”.

If a hardcopy of the data is needed during survey operations, integration of a thermal printer is required within the above-mentioned system. There are a few thermal image printers that may be used; the one that is most commonly used is the EPC GP1086. This printer needs to be connected to the ISIS PC system; all required connectors should be supplied with the printer when leased. Verify with the leasing agent that all required connectors will be supplied for the DF1000/DCU/ISIS configuration. The agent should be able to provide direction on any special connection issues; do this during the mobilization time in the office. It is important to remember that the data being collected is digitally stored on the hard disk or on some sort of backup media. The hardcopy can always be generated post processing back in the office.

The ISIS field system is equipped with either an internal Jazz drive and/or a magneto-optical (MO) drive. Be sure to confirm which of the two types of media will be used for data collection, and make sure that ample blank media are available. Always make backups of the data when appropriate time is available.

15.0 Data Management and Records Management

A logbook is filled out for each day of survey operations. The log contains information on personnel aboard, equipment in use, times and positions of start and end of survey transects. Any other pertinent information related to a course of a survey day is also recorded.

The actual digital sonar data files are recorded electronically onto a Magnetic Optical (MO) disk. These disks are switched out on needed bases to provide ample data storage space as needed.

At the end of the survey day the data disks should be backed up and stored in a designated place safe from any potential weather elements. At the end of all survey operations, Xerox copies of the logbook should be made and kept on file for future reference.

16.0 Quality Assurance/Quality Control (QA/QC)

Quality Assurance:

No specific reference materials or standards exist that can be used to evaluate directly the accuracy of side-scan sonar data. Precision will be evaluated by comparing the "duplicate" side-scan sonar records that will be obtained over relatively broad areas. This duplication provides a means to check on the precision (repeatability) and degree

of resolution of the survey method. Duplicate records should agree closely in terms of both the type(s) of surface features present and the location of these features. Data on surface sediment type (i.e., grain size) at the side-scan sonar lane points of intersection will be obtained from both the sediment coring and SPI surveys. These data can be used as an independent check or ground truth of the side-scan sonar interpretation. The sediment type determinations for the baseline side-scan sonar survey will be compared against both the SPI and coring results. One of the DQOs for the side-scan sonar sampling effort relates to completeness. To meet the objective of characterizing sediment conditions (including the degree of spatial variability) within and around each placement cell, it is important that a complete side-scan sonar record is obtained along each of the planned survey transects. Procedures for meeting the 100% completeness goal are described in the Quality Assurance Project Plan.

Quality Control:
Duplicate side-scan sonar records will be compared. There should be 100% agreement between the two records in the sediment type determination and the identification of surface features. The two records should agree within ±10 m with respect to the location (coordinates) of specific targets or features.

Data on surface sediment type (i.e., grain size) at the side-scan sonar lane points of intersection, obtained from both the sediment coring and sediment profile imaging surveys, will be used as an independent check or ground truth of the side-scan sonar interpretation. At 90% of the stations, there should be agreement between the sediment-profile imaging and coring grain size results versus the sediment type determination obtained through side-scan sonar interpretation.

17.0 Checklists

1. Mobilization checklist (see attached sheet)
2. Demobilization checklist (see attached sheet)

18.0 References

No references are applicable to this Standard Operating Procedure.

Appendix

No appendix is included with this Standard Operating Procedure.

Side Scan Sonar Operations - Mobilization Checklist

Project: _____ **Date:** _____

Fill out sheet and keep on file with data log book

		Check Box
1)	Set up ISIS and DCU/DCI interface	☐
2)	Spool deck cable to winch and assemble slip ring	☐
3)	Connect slip ring interface with DCU/DCI interface	☐
4)	In ISIS perform a "rub test" on the DF-1000 towfish	☐
5)	Format a surplus of Magnetic Optical (MO) disks for side scan data storage	☐

Filled out by: _____

Side Scan Sonar Operations - Demobilization Checklist

Project: _____ **Date:** _____

Fill out sheet and keep on file with data log book

		Check Box
1)	Data File Back-Up	☐
2)	Towfish/Data Cable Fresh Water Rinse	☐
3)	Spool Data Cable for Shipping	☐
4)	All Cables and Peripherals for the DCU/DCI and ISIS system packed	☐
5)	Lease Company Contacted for Return Shipment Awareness	☐

Filled out by: _____

Standard Operating Procedure (SOP)
For
Datasonics CAP-6600 Chirp II Acoustic Profiling System

Revision 01
July 24, 2000

Prepared by: Ellen Tobey — Date: June 16, 2000
Marine Staff Scientist

Reviewed by: Ted Turk — Date: June 23, 2000
Senior Scientist

Approved by: Ray Valente — Date: June 26, 2000
Project Quality Assurance Officer

Science Applications International Corporation
221 Third Street
Newport, RI 02840

Table of Contents

1.0 Scope and Applicability

Subbottom seismic profiling is used to determine changes in acoustic impedance below the sediment/water interface, and therefore detect sediment layering that might reflect depositional trends from the study area.

2.0 Summary of Method

SAIC will utilize a Chirp II Digital Subbottom Profiler, manufactured by Datasonics Inc., to acquire high-resolution subbottom profile s of both the near bottom and deeper subbottom layers. The chirp system produces very high-resolution profiles from a precise, computer generated swept-frequency acoustic output whose reflected returns are match filtered to compress the pulse and suppress noise. The system is designed to operate in depths to 600 meters. This allows you to adapt the system to a wide variety of coastal surveys and other shallow-water applications. The subbottom profile is studied to identify the extent and geometry of the effluent-affected sediment deposits.

3.0 Definitions

Chirp II Acoustic Profiling System: A high-resolution acoustic subbottom profiling system that determines different sediment layers beneath the sediment-water interface of the seafloor. The differences are delineated based on the acoustic impedance of the individual sediments. The impedance is a factor of the sediment's density and the speed of sound through these sediment layers.

Subbottom Profile: A vertical profile of the upper sedimentary layers of the seafloor.

4.0 Health and Safety Warnings

1) The Chirp profiler is an electronically powered instrument and should be treated with common safety awareness related to general electrical usage.

2) The towfish unit should be deployed and recovered with at least two personnel so that excessive weight strain does not cause injury to the handlers.

3) There should be two SAIC personnel on deck during towfish deployment and recovery operations, as well as one qualified person supplied by the chartered survey vessel, tending the winch. One SAIC person should be designated as deck leader and that one person should be responsible for all communications between the winch operator, deck hands, and bridge personnel.

4) All deck personnel should be able bodied and have appropriate safety equipment (floatation vest, steel toed boots).

5.0 Cautions

Before making any connections to the workstation, be sure that the transceiver is turned off by checking that the power switch on the front panel of the transceiver is off.

Make sure that the transceiver is off while the towfish is out of the water for extended periods. It is not good for the transducers to be free pinging in air, as the equipment was designed for marine operations.

Do not use the deck cable to hoist or tow the vehicle. Although the cable is Kevlar reinforced and has a strength member, it is not to be used for towing. Only a separate steel cable or armored multi-conductor tow cable may be used for this purpose.

Upon completion of survey operations the SAIC crew will run through a demobilization checklist that will ensure that the leased equipment has been packed up with all components. All data files should be backed up before further demobilization is conducted. The data tapes will be transferred in an appropriate fashion to keep safe from the elements to the processing office. The towfish and data cable should be rinsed with fresh water if possible, and the data cable should be re-coiled or spooled the way that it was received. All cables and peripherals to the Chirp system should be accounted for and packed.

6.0 Interferences

No definitions are applicable to this Standard Operating Procedure.

7.0 Personnel Qualifications

Any individual who will be maintaining, calibrating, or operating the Chirp II Digital Subbottom Profiler will be trained for the system. All individuals operating this equipment will be readily familiar with the technical and operational aspects of the equipment as specified in each of the respective instrument's operation manuals.

The person operating the winch should be properly trained on standard winch assisted deployment operations.

8.0 Apparatus and Materials

The Datasonics CAP-6600 Chirp II Acoustic Profiling system is a fully integrated dual channel, dual frequency sonar system. The system SAIC will use on this survey includes the Datasonics CAP-6600 Chirp II Workstation hardware is composed of two major functional components the DSP-661 Processor, and the DSP-662 Transceiver. Other equipment involved is the TTV-170 tow vehicle, an EPC thermal printer, coaxial tow cable (double armored or Kevlar®) and winch equipped with slip ring (if required).

The Chirp II system generates a frequency-modulated pulse that is swept over an acoustic range from 2 to 7 kHz and 8 to 23 kHz over the subbottom survey. This system has the potential to detect layer thickness in the 10-20 cm range. The pulse rate is kept at 8 pulses per second for optimum performance of the output devices. Traveling at the average vessel speed of 4 knots, a subbottom measurement will be acquired every 25-30 cm along the vessel track.

The amplified return signal of the Chirp II transducers are sent through an A/D converter to an on-board PC for data display and archive. Chirp II data acquisition system consists of computer components for automatic data storage, real-time color data display, and hard-copy printouts of profile data. Data are displayed on the screen in real-time and ported to an EPC thermal printer for a hard copy record. Data are also stored on Magneto-Optical (MO) disks for further processing onshore. The data will be reviewed in real time to locate potential targets..

9.0 Instrument or Method Calibration

Prior to survey operations, SAIC personnel install the sonar acquisition system and tests data communication interfaces for proper operation. Offset distances between the towpoint and the GPS position, antenna are determined to facilitate accurate calculation of towfish position during survey operations.

Prior to the survey operations, SAIC personnel install the subbottom profile system and all necessary navigation and positioning equipment on the survey vessel and data communication interfaces will be tested for proper operation. The subbottom signal cable is mated to a mechanical tow cable mounted the vessel's winch. Offset distances between the tow point (shieve) and the GPS positioning antenna are determined to facilitate accurate calculation of towfish position during survey operations.

Electronic tests of the subbottom profile system and towfish are conducted prior to survey operations to ensure that all system components are fully operational. These tests include full-system "wet tests" with the towfish in the water while the survey vessel is at the pier, to test acoustic transmit energy and receiving circuitry.

10.0 Sample Collection, Handling and Preservation

This section is not applicable to this Standard Operating Procedure, refer to section 13.0.

11.0 Sample Preparation and Analysis

This section is not applicable to this Standard Operating Procedure.

12.0 Trouble Shooting

1) If any technical problems arise with the Datasonics CAP-6600 Chirp II Acoustic Profiling system refer to the included user manual. If problems persist then call the lease company's technical support number.

2) If any software problems arise with Datasonics CAP-6600 Chirp II Acoustic Profiling system refer to the included Software Guide manual. If problems persist then call the lease company's technical support number.

13.0 Data Acquisition, Calculations and Data Reduction

Connect the keyboard to the KEYBOARD connector and the trackball to the MOUSE connector on the front panel of the processor. Then connect the monitor cable to the HIGH RES VIDEO OUT connector on the rear panel of the processor, and to the monitor. Connect the printer cable to the LPT1 connector. Connect the navigation output from the shipboard navigation system to the COM1 connector. Be sure the monitor power switch is off and connect the monitor AC power cable to the monitor if it is not already attached, and to the VAC output connector on the rear panel of the processor. Connect one AC power cable to the VAC input connector on the rear panel of the processor, and the other to the rear panel of the transceiver. Connect both cables to the 100-125 VAC or 220-240 VAC, 50 –60 Hz power source. When all the connections to the workstation are complete, connect the 50 meter Kelvar reinforced deck cable connector to the TRANSDUCER connector on the rear panel of the processor. Connect the opposite end of the deck cable to the tow vehicle.

Assuming that the complete system is connected properly, including navigational integration, the user is ready to start collecting "online" data.

1) Perform a predeployment check of the towfish transducers on deck before deploying the towfish unit. Deploy the towfish into the water and power up the subbottom acquisition equipment.

2) Run a survey test line by having the vessel transit in a straight line at a speed comparable to what the survey will be run at (~ 4.0 knots). Put out enough cable to compensate for the constant speed and water depth. Remember that if the survey is in an area with changing topographic relief there is an increased concern about hitting the seafloor with the towfish. This needs to be avoided and can be with the use of bottom tracking on the side scan data display. It is also good practice to familiarize yourself with the topography of the survey area ahead of time if possible (eq. NOAA nautical charts). It may be necessary in

some areas to have a person manning the winch at all times to make necessary cable in/out changes depending on the water depth.

3) Before beginning the recording of data, some control settings may need to be reconfigured from those set prior to the predeployment checks. They include the transmit and receive control settings, the display gain and threshold settings, and the bottom tracking and TVG control settings. The transmit and receive settings, and the bottom tracking and TVG settings, are entered in the Chirp 2 Status dialog box using options buttons and scroll bars. The display gain and threshold settings are entered in the Display Gain Setup dialog box using scroll bars.

4) To start collecting the data in the Datasonics CAP-6600 Chirp II Workstation, type WIN and press enter. The system enters the Windows environment and displays a Datasonics applications group window in the center of the Windows desktop. This group contains the Chirp II icon. Double click the icon to open the main application. As the application is being loaded, the system presents a Windows information box showing how the system's four communication ports are configured. Click on the OK button.

5) When the system completes the application startup, it will display the Chirp II main window which contains the following elements:

- Five pull-down menus on the left side of the menu bar: File, Display, Window, Tools and Help. These menus provide access to the principal Chirp II functions.
- Seven quick-access icons on the right side of the menu bar. These icons provide direct access to selected display and print functions.
- The Chirp II Status panel on the right of the screen. This window contains system control functions, status information from the sonar arrays and the ship's navigation system, and controls for adjusting individual displays. Unlike other windows in the application, the Chirp II Control Panel cannot be resized.

6) During the survey, subbottom profile data are stored on magnetic optical disks. These disks are read and analyzed using an SAIC PC-based C-complied program ISIS. Each subbottom line was played back and converted to a TIF image in ISIS. An individual TIF image was created to represent each subbottom line surveyed.

Results from the subbottom profiling will compliment the subbottom profile survey results that reveal spatial variations in surface sediment characteristics. For example, if the side-scan results reveal a horizontal gradient in sediment characteristics or bottom roughness at a specific location, the subbottom profile results can be used to determine whether this surface transition is also associated with horizontal gradients in subsurface sediment properties (layers). Furthermore, if the side-scan data indicate hard-bottom outcrops or other bottom features, the subbottom data can be used to validate the side-scan interpretations.

The subbottom profile results also will be complimented by the sediment cores to be acquired at nine locations in each of the four cells. The sediment characteristics determined from geotechnical analysis of the cores will be useful for "ground-truthing" of remotely sensed data from both the subbottom profiling and the side-scan sonar. For example, if distinct sedimentary layers are identified in a sediment core, then assessment of layers in the subbottom results could be visually correlated.

The subbottom profile results from the baseline survey will later be used for comparison with subbottom profile results acquired along the identical survey lanes following placement of cap material, in order to assess the spatial coverage and potential spreading of cap material.

The shore facility (office) is most likely the place where post processing will occur. This allows access to in-house networking capabilities including hard disk space for storage of the newly acquired files. Setup the ISIS system with the chassis, monitor, keyboard, mouse and hardkey dongle.

The digital subbottom profile data stored on MO disks are read and analyzed using ISIS. The subbottom data are displayed on a PC monitor as a continuous profile, duplicating the shipboard display. Sub-seabed geologic features are digitized using the Sub-bottom Picking and Tracking option within the ISIS 4.32 program. The depth to the first arrival (the sediment-water interface) is may be automatically tracked and subbottom layers are manually digitized by tracing sub-surface reflectors with the computer's mouse. As many as twenty one separate layers can be tracked simultaneously. For each survey line that sub-bottom profiler data is collected, a data file is produced with the .SBP file extension.

This file will undergo navigation data reprocessing, if necessary, and then be digitized.

The data file is replayed in the ISIS program with the Sub-bottom Picking and Tracking option open (under tools menu). To incorporate the digitized sub-bottom data into the Arc based project charting; it is necessary to digitize the position of the seabed on the bottom data to be used as a reference point. Once the seabed has been digitized, all sub-seabed features and reflectors are referenced to the seabed position.

To begin first click "play" and locate the proper .seg file. The file runs and stops by pressing the space bar. Make sure you are at the beginning of the file: to do this press page down and check that you are at Ping 1.

With the sub-bottom data file ready to be replayed, the Sub-bottom Picking and Tracking option is selected from the Tools menu in the ISIS program. To select the type of data output from the digitizing routine, the Options button needs to be clicked on and the following items selected:

Include in Output File	Date and Time
For Each Reflector Include	Reflector and Number Distance in Meters Ascii reflector description/label (important to be able to trace reflectors later ie 1)seabed , 2) 1st reflector)
Spaces Between	20
Search Radius	10 Pixels

Store Points Based On	Time Once Every 1.00 Seconds
Display Options	Lines
Selected Colors	Red and Green

Returning to the main menu in the Sub-bottom Picking and Tracking option, select the following:

Tracking	Manual usually unless data is clear and clean then use Automatic
Reflector	1 (For Seabed) 2 (For reflector 1) 3 (For reflector 2)
Description	No Selection for Seabed
Tracking Method	Top Edge or center

It will be necessary to change threshold for seabed and then for the reflectors. This helps to receive a better image. Do this by right clicking on the screen with the data. You may change the threshold at any time.

It is necessary to name the output file and the directory in which the file will be saved. Click on the Set button and select the directory in which the file will be saved and the file name (use the **Line Number** it will have a .SBP extension.)

Begin to play back the file and pause after playing back half a screen of data. Hold the control key down and left mouse click on the seabed. A red line with the number "1" will appear on the seabed as you drag the arrow along the seabed to the right side of the screen.

At the end of the playback, click on End this Reflector and then Flush to File. The remainder of the data will be added to the .SBP file and the seabed will have been digitized. Return the file to the beginning again, or to the time at which you started if there are more than one Lane in the file.

Return to the Menu and click on Manual and Reflector 2. In the Description Box, select the appropriate descriptor. Start playing the data file again and pause after half a screen of data has been replayed and select the first sub-seabed reflector to be digitized. This may not be possible in some areas and the data will need to be replayed further until a reflector is identified. If a reflector is evident within the data, move the mouse arrow to the top of the reflector; hold down the control key and then the left mouse button. Trace the arrow along the reflector and a red line will trace the reflector and the number "2" will appear along the line. Trace the reflector to the right side of the screen and then playback another half screen of data. As the manual option has been selected the red line will not automatically track the reflector and the procedure of moving the arrow to the reflector will have to be repeated. If the reflector is

strong enough and laterally persistent, the automatic mode can be selected and the layer can be digitized automatically. The reflector is digitized throughout the file and at the end of the second playback the data file is returned to the beginning and reflector number 3 is selected and the process is repeated. If reflector number 2 follows the base of the upper sediment layer, reflector number three can be used to show the localized sub-seabed sediment sequence. Sub-seabed features such as boundaries between well bedded sequences and glacial till can be digitized, as can erosional surfaces and areas of sediment slumping.

After digitizing each reflector, the data will be flushed to file and at the end of the digitizing session the menu will be closed.

14.0 Computer Hardware and Software

System Components:

The standard CAP-6600 System includes:
Datasonics DSP-661 Sonar Image Processor system consisting of a Windows-based digital image processor and sonar transceiver configured in a portable enclosure. The transmit/receive electronics are installed in the sonar transceiver.
Datasonics TTV-170A Tow Vehicle configured with a low-frequency transducer, a high-frequency array and a hydrophone array.

System Features:

- Long FM pulses provide an additional 20 dB to 30 dB of signal-to-noise ratio improvement over conventional subbottom sonar systems.
- Matched-filter correlation signal processing provides a fourfold improvement in resolution compared to systems using standard processing in the same frequency band.
- The system provides relative quantitative measurements of bottom hardness and sediment classification.
- Signal processing results in reduced transducer ringing and spatial side lobes.
- The transmitted waveform is repeatable from pulse to pulse.
- The system maintains constant temporal resolution with range and penetration.
- Pulse characteristics are programmable. Pulse length and span of the frequency sweep of the transmitted waveform can be varied without hardware changes.
- Acoustic data are quantitative, allowing measurement of sonar data required in sediment classification.
- The system processes multiple pings.

- Sonar data records are stored on an Exabyte 8 mm helical-scan tape cartridge or magneto-optical (MO) disk drive in SEG-Y format.
- The system includes a standard NEMA-0183 navigation systems interface. When the interface is in operation, the system displays the ship's speed, heading and longitude/latitude in real time, and provides a serial output of these data.

For post processing ISIS is used. ISIS, produced by Triton Elics is a PC-based system used to digitally store digital or analog subbottom data. In addition, ISIS is a powerful post-processing tool that permits the development of high-resolution digital mosaics of subbottom data. The ISIS system is installed on a computer package, consisting of two primary pieces of hardware: a computer chassis, and a high-resolution monitor. Smaller, peripheral items include the power and monitor cables, keyboard, HardLock dongle (parallel port connector), mouse, and signal interface hardware (small silver box). ISIS will not function properly without the hardlock in place.

15.0 Data Management and Records Management

A logbook is filled out for each day of survey operations. The log contains information on personnel aboard, equipment in use, times and positions of start and end of survey transects. Any other pertinent information related to a course of a survey day is also recorded.

The actual digital sonar data files are recorded electronically onto a Magnetic Optical (MO) disk. These disks are switched out on needed basis to provide ample data storage space as needed.

At the end of the survey day the data disks should be backed up and stored in a designated place safe from any potential weather elements. At the end of all survey operations, Xerox copies of the logbook should be made and kept on file for future reference. The digital data is archived and kept in storage for future reference.

16.0 Quality Assurance/Quality Control (QA/QC)

To meet the objective of characterizing sediment conditions (including the degree of spatial variability) within and around each placement cell, it is important that a complete sub-bottom record is obtained. SAIC's procedures for ensuring that the 100% completeness goal is met are described in detail in the Field Sampling Plan and Quality Assurance Project Plan. One of the advantages of the intersecting survey transects is that "duplicate" sub-bottom profile records will be obtained at the points of intersection. This duplication provides a means to check on the precision (repeatability) and degree of resolution of the survey method. It is expected that there will be high degree of agreement between results for the two different survey transects at each point of intersection. Specifically, both records should show the same features (i.e., sub-bottom reflectors) are present, and there should be reasonable agreement in the measured thickness of these layers. The resolution of the sub-bottom technique in the study area

(water depths ranging from 40 to 70 m) is expected to be on the order of ±20 cm. The degree of agreement between "replicate" measurements cannot be expected to be any better than this minimum resolution.

Sediment coring and sediment profile imaging data will be obtained at the sub-bottom points of intersection. If there are any discrete depositional layers on or near the sediment surface with thickness less than about 20 cm, both coring and sediment profile imaging should detect them. This provides a means to independently ground-truth the sub-bottom results. Distinct sediment horizons or depositional layers greater than 20 cm also may be detected through core sampling, depending on the depth of core penetration. The results of the baseline sub-bottom survey will be compared against both the sediment profiling and coring results.

A final objective of the baseline sub-bottom monitoring is to confirm that thickness of EA sediment. Past investigations have demonstrated that the EA sediment deposit is characterized by a lower density and finer grain size than the native sediment. The EA sediment deposit is known to range in thickness from 5 cm to greater than 60 cm and is underlain by firmer native shelf sediments (Lee 1994). The difference in density between the EA sediment and underlying native sediment should be detectable by the sub-bottom acoustic technique, allowing the EA sediment thickness to be determined.

17.0 Checklists

There are no checklists associated with this SOP.

18.0 References

Datasonics Inc., Chirp II Digital Subbottom Profiler Operation Manual.

Appendix

This section is not applicable to this Standard Operating Procedure.

Standard Operating Procedure (SOP)
For
Near-Bottom Marine Water Sample Collection Using a Rosette Water Sampler Interfaced with a Water Profiling CTD, Transmissometer and Altimeter

Revision 01
July 24, 2000

Prepared by: Greg Tufts — Date: June 16, 2000
Marine Staff Scientist

Reviewed by: Ted Turk — Date: June 23, 2000
Senior Scientist

Approved by: Ray Valente — Date: June 26, 2000
Project Quality Assurance Officer

Science Applications International Corporation
221 Third Street
Newport, RI 02840

Table of Contents

1.0 Scope and Applicability

Near-bottom water sampling coupled with conductivity, temperature and depth (CTD) water column profiling is used on the Palos Verdes Pilot Capping monitoring program to assess the concentrations of total suspended solids (TSS) and p,p' DDE in the plume of suspended sediment that is generated following the placement of cap material. The method will also be used to map the extent of plume dispersion during cap placement operations.

2.0 Summary of Method

A General Oceanics 1016 Intelligent Rosette with 12, 10-liter Niskin bottles interfaced with a Seabird SBE 911 plus CTD integrated profiling package is used for collection of water samples and vertical profiling of temperature and conductivity (Figures 2-1 and 2-2). The Niskin bottles are used for water sample collection. The CTD package includes temperature, conductivity and depth (pressure) sensors and a WET Labs C Star 25cm pathlength transmissometer. A Datasonics PSA-900 sonar altimeter also will be mounted on the CTD package. The primary purpose of the CTD is to provide depth measurements for water sample collection, correlate data with the transmissometer and plume monitoring and provide the instrument interface for the altimeter and transmissometer. The CTD package is mounted on the Rosette for simultaneous in-situ profiling, plume identification and discrete water sample collection.

Figure 2-1. Photograph of the General Oceanics (GO) 1016 Intelligent Rosette with twelve 10-L Niskin bottles mounted in a circular pattern.

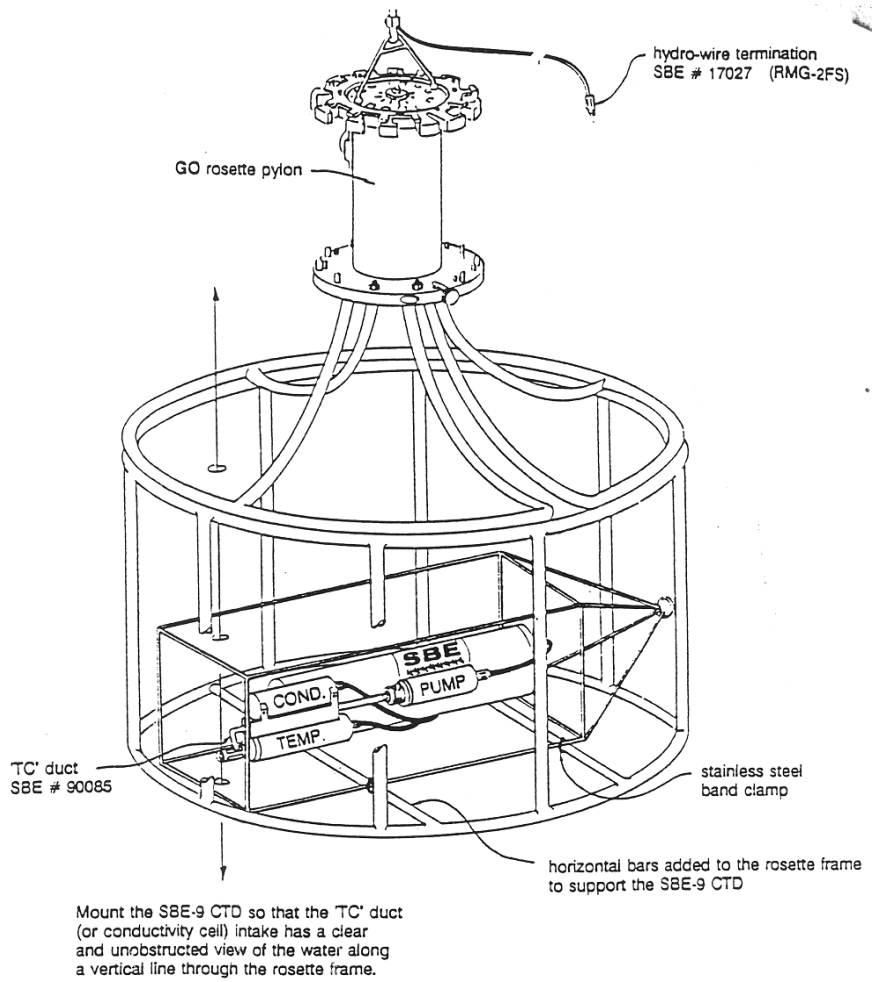

Figure 2-2. Schematic diagram showing a Seabird SBE 911 CTD mounted horizontally in a frame below the General Oceanics (GO) Rosette (note: the Rosette is shown without the Niskin bottles attached).

3.0 Definitions

- CTD = Conductivity, Temperature and Depth (pressure)
- TSS = Total Suspended Solids
- p,p'-DDE = p,p' Dichlorodiphenyldichloroethylene (DDE), a degradation product of the pesticide DDT.
- Niskin Bottle =An industry standard plastic water sample collection bottle that is used to collect water samples within a water column.
- Rosette = A two component water sampling system comprised of a deck command unit and a submersible water sample collection bottle mounting array that, together, enable an operator to remotely actuate a sequence of multiple water sampling bottles for water sample collection.
- Conductivity =

4.0 Health and Safety Warnings

4.1 In General:

The Rosette/CTD underwater unit is a heavy piece of sampling equipment that is supported by a thin-edged aluminum mount stand. The operator must use caution when deploying and retrieving this gear, especially under adverse weather conditions. Proper safety equipment (hard hat, safety vest, steel-toed boots/shoes) will be worn by all personnel operating this equipment. Under adverse weather conditions, tag lines will be used to secure the unit during deployment and retrieval. Refer to the Project Work Plan's Health and Safety Plan for further health and safety guidelines.

4.2 Equipment:

SeaBird 911 plus CTD:

- Life-threatening high voltages are present in both the deck unit and underwater unit when power is on. These hazardous voltages persist for up to one minute after removal of power. The best way to protect against electrical shock is to disconnect the ac main cable from the rear panel of the deck unit, then wait a full minute before attempting service.
- Always disconnect the ac main cable before checking fuses.

4.3 Contaminant Exposure:

Chemical Hazards

- Chemicals found in Effluent-Affected (EA) sediments during previous investigations on the Palos Verdes Shelf include DDT and PCBs. These sediments may be suspended, and therefore collected, in the water samples taken for this project. To prevent any possible exposure to these chemicals, all personnel that come in direct contact with these samples will wear proper safety clothing including rain gear or tyvek suits, safety glasses to prevent eye contact due to splashing and nitrile gloves (modified Level D).

5.0 Cautions

5.1 Equipment Damage

SBE 11 plus CTD Deck Unit

- Connecting an SBE 11 *plus* set for 120 volts to 240 volt power will cause significant equipment damage.
- Additional equipment damage prevention procedures can be found in the CTD operating and repair manual.

6.0 Interferences

No interferences are identified for this method.

7.0 Personnel Qualifications

7.1 Rosette/CTD:

Any individual who will be maintaining, calibrating, or operating the Rosette and CTD should be trained in each of these operations. All individuals operating this equipment will be readily familiar with the technical and operational aspects of the equipment as specified in each of the respective instrument's operation manuals.

8.0 Apparatus and Materials

8.1 Equipment:

- Model 1016-12 Rosette Water Sampler
- SeaBird 911 plus CTD including deck box
- C Star Transmissometer
- Datasonics PSA-900 Programmable Sonar Altimeter
- PC laptop computer
- Surge protector
- All necessary cables and plugs including spares
- Battery Pack (with 12 spare D cell batteries)Computer disks
- Equipment Manuals
- Tool box

8.2 Water Sampling Supplies:

- 350 500-ml plastic sample bottles (including labels) for TSS (supplied by analytical laboratory).
- 65 2-L certified clean amber jars (with certification) with Teflon lined caps for p,p'-DDE (supplied by analytical laboratory).
- Large plastic squirt bottle with de-ionized water
- Laboratory paper wipes or paper towels (Note: avoid use of Trademark names - use generic name)
- Waterproof tape (e.g. electrical tape)
- Clear packaging tape
- Indelible ink pens
- Refrigeration unit or ice filled cooler to maintain 0-4 degree C sample temperature

9.0 Instrument or Method Calibration

In general, temperature measurement instrumentation, ovens, and balances are calibrated with thermometers and weights traceable to the National Institute for Standards and Technology (NIST).

9.1 Model 1015 Rosette Water Sampler:

No calibration procedures are needed for this apparatus.

9.2 Seabird SBE 911 plus CTD:

For highest accuracy the manufacturer calibrates the Sea-Bird temperature and conductivity sensors by subjecting the separate modules to known physical conditions, and measuring the sensor responses. Coefficients are computed which are used with appropriate algorithms to obtain engineering units of temperature, conductivity, and pressure. The sensors are supplied fully calibrated, with the coefficients printed on Calibration Certificates provided by the manufacturer's calibration facility. The pressure sensors are so stable and immune to environmental effects that it is considered sufficient to check that the 0 pressure reading (air reading) closely matches the local barometric pressure.

In addition to the above calibrations, the following methods for CTD calibration integrity are utilized:

- Temperature: every 3-6 months a duplicate seabird temperature sensor is mounted on the 911plus during water profiles.
- Conductivity: discrete wet samples are collected and analyzed with a Guildline Autosal Salinometer. The Autosal is calibrated with IAPSO standard seawater with each set of samples.

If these calibration checks of the above sensors reveal a problem, the instrument are returned to the manufacturer for troubleshooting and/or re-calibration.

9.3 WET Labs C Star Transmissometer:

The C Star transmissometer is factory calibrated by subjecting the instrument to several tests including a temperature bath, clean water reading and blocked path to provide the characterization voltages required to obtain accurate readings in the field. A similar in-house calibration procedure (as described in the operating manual) is used to verify that the instrument remains calibrated to the manufacturer’s specifications. Any major discrepancies in instrument performance will be resolved by sending the instrument to the manufacturer for re-calibration.

Field calibration of the transmissometer is performed by checking the offset voltage and the air reading. The offset voltage is obtained by fully blocking the instrument's beam path with the instrument clean, dry and on deck. The air reading is obtained by recording the voltage of the sensor when there is no blockage of the beam. These values are then compared to the values recorded on the factory calibration sheet. If there is little fluctuation (~0.2 volts for the air reading and ~0.002 volts for the blocked reading) between these values the instrument remains calibrated. Additionally, this field calibration should be conducted before and after each survey to check instrument drift. There should be no changes in readings before or after each survey. Fluctuation in this instrument below the above thresholds should be brought to the attention of the manufacturer and may require factory re-calibration.

10.0 Sample Collection, Handling and Preservation

10.1 Bulk Collection of TSS and p, p' DDE water samples:

Water samples for analysis of total suspended solids (TSS) and p, p' DDE will be collected via the General Oceanics 1016 Intelligent Rosette with 12, 10-liter Niskin bottles made of PVC fitted with Fluorocarbon Coated Stainless steel springs. The operating instructions for the collection of these samples is as follows (see Rosette Instruction Manual for more detailed information):

1) Lower the Rosette system into the water to sampling depth.
2) When at desired sampling depth, press the TRIGGER switch on the CTD deck unit. Observe that the SAMPLE light goes on. Record sample bottle number and time, depth and location in field log book.
3) After about ten seconds, SAMPLE light should go out and the READY lamp should re-light.
4) Step through the unfilled positions on the Rosette by continually pressing the TRIGGER light as soon as the READY lamp lights.
5) If SAMPLES TAKEN display fails to advance, continue pressing TRIGGER button. If there is no response, follow the trouble shooting procedure in the Rosette Instruction Manual.
6) Repeat the above steps until all samples have been taken.
7) Retrieve Rosette.
8) Remove bottles one at a time for sub-sampling (see below).

10.2 Sub-Sampling for TSS and p, p' DDE:

The first samples to be drawn from the Niskin bottles after the underwater unit is back on deck are the p, p' DDE samples, followed by the TSS samples using the following procedures:

- Remove the Niskin bottle that is to be sub-sampled from the Rosette.
- RESUSPEND the solids that may have settled during deployment by inverting the Niskin bottle a number of times.
- With the Niskin in a vertical position, quickly pull back the top plug that is sealing the end of the bottle and fill both the p,p'-DDE and the TSS sample containers by pouring them full of water from the Niskin, avoiding direct contact of the Niskin with the mouth of the sample container. (Note: typically, water is sampled via the small discharge valve on the Niskin. However, to prevent the re-settling of suspended particles in the Niskin due to the time that would be required to fill the large 2L bottles, this alternative method was choosen).
- Seal the sample containers with waterproof tape.
- Complete the sample label using an indelible ink pen and place it on the sample container. Information to be recorded on the label includes: survey number, station identification, date and time collected, sample replicate number, collector's name or initials, analysis to be performed.

- Wrap the completed label and container with the clear packaging tape to ensure label adhesion during storage and shipment.
- Place the samples in the 0-4 degree C refrigeration unit (refrigerator or cooler with ice).

10.3 Chain of Custody (COC):

Ensuring the proper completion of the COC is the responsibility of the water sampling Field Leader for each day of water sampling operations. These COC forms will accompany the samples and/or data records that are transferred to shore at the end of the day's field operations. A duplicate copy of the completed COC form is submitted to the SAIC Project Manager for entry to the project archive. A detailed discussion of the project COC requirements can be found in the Field Sampling Plan (FSP) and the Quality Assurance Project Plan (QAPP).

11.0 Sample Preparation and Analysis

TSS and p,p'-DDE sample preparation and analysis will be performed by a subcontracted laboratory in accordance with their SOPs.

12.0 Trouble Shooting

12.1 Model 1016-12 Rosette Water Sampler

Many problems associated with the rosette can quickly be cleared by checking the following points:

- Deck Fuse
- Correct input voltage selected (115VAC or 230VAC)
- Deck unit and submersible array set to same polarity
- Polarity compatible with CTD
- Grounding of submersible array
- Cleanliness of ramp shaft and release pins
- Connections to sea cable

When examining parts associated with the rosette, use extreme caution. High voltages are present

Faults that cannot be cleared by checking these points probably involve the deck unit, electronic printed circuit board or the electronic module in the submersible array. Refer to the CTD System Operating and Repair Manual and the General Oceanics Rosette Multi-Bottle Array System Instruction Manual for further trouble shooting guidance and reference.

12.2 SeaBird 911 plus CTD Underwater and Deck Unit:

Refer to the CTD System Operating and Repair Manual (Underwater and Deck Unit) when trouble shooting the CTD.

- Be sure to read the trouble shooting sections in their entirety before trying to repair the CTD. A number of life-threatening safety conditions are identified when conducting in-field repairs.

The servicing of the Sea-Bird CTD should only be performed by experienced technicians who have been trained to work with complex mechanical/electrical equipment.

13.0 Data Acquisition, Calculations and Data Reduction

13.1 Data Acquisition:

SeaBird 911 plus CTD:

The deck unit (SBE 11*plus*) provides power to the seacable, decodes the data arriving from the underwater unit, and interfaces to a computer. The deck unit may be programmed to pass only the desired sensor channels, and to average scans for lower archival rates if desired (see operating manual). The C and T variable frequencies are routed to separate counters that are allotted exactly 1/24 second to derive 24-bit binary values representative of each sensor frequency. Binary data from the entire suite of C, T, P, and auxiliary sensors are transmitted serially 24 times per second using a 34560 Hz carrier differential-phase-shift-keyed technique. This telemetry system is suitable for all single and multi-conductor seacables having a conductor resistance of 350 ohms or less.

C Star Transmissometer:

For data collection the C Star must be connected to a host system (i.e. CTD) which will receive the analog voltage output and digitize it. Adding the instrument to the CTD solves many problems in that the data is merged with CTD data, correlating the C Star output with depth or time automatically. This ensures that the transmissometer data is tied to the rest of the physical data. See the C Star Transmissometer User's Guide for further operation and integration of this equipment.

Datasonics PSA-900 Altimeter:

The CTD deck box collects the data generated by the altimeter. A detailed discussion of altimeter data collection can be found in the owner's manual.

13.2 Calculations:

Refer to each instrument operation manual for technical information on calculations.

13.3 Data Reduction:

Data reduction for the CTD and auxiliary sensors is accomplished automatically with the system's SEASOFT data acquisition and display software. SEASOFT's executable program SEASAVE saves raw data to a disk file and creates an ASCII or binary intermediate file in engineering units. All SEASOFT processing, display, and plotting programs operate with intermediate files. A number of utilities within the software permit creation of custom output files. Refer to the operating manual for further information.

14.0 Computer Hardware and Software

14.1 Hardware:

CTD/Rossette water sampling data is acquired using a laptop personal computer for real-time display, vessel positions and data storage. The computer will be interfaced with the SBE 11 plus Deck Unit, which will route data information from the Rosette/CTD, transmittometer and the altimeter.

14.2 Software:

SeaBird 911 plus CTD:

- Sea Bird Electronics, Inc. SEASOFT Data Acquisition software.

Model 1016-12 Rosette Water Sampler, C Star Transmissometer and altimeter:

- Interfaced with the SeaBird 911 plus CTD acquisition software (SEASOFT) described above.

15.0 Data Management and Records Management:

15.1 Electronic Data:

A laptop personal computer is used to display the incoming data and to store it on hard disk. During surveys the incoming data will be displayed in real-time plots to identify and distinguish plume characteristics. As mentioned above, an executable program called SEASAVE is used to record convert, and display the CTD data. This program is mostly menu driven and requires relatively little input by the operator. The menu dialogue follows the Seabird SEASOFT software (see Seabird manual for guidance). The SEASAVE software automatically writes all CTD data (24 scans per second) to a file on the hard disk drive. The sample format for the tabular electronic water quality is found in the table below.

Table 1. Sample Format for Electronic Water Quality Data

Time	Location (Lat/Long)	Conductivity	Temperature	Depth	Altimeter Reading	Transsmissometer Reading	Water Sample Number

15.2 Field Data

Field Logs

A hard-copy field log will be maintained for water sample surveys. The log will be used to document all sampling and data recording events, as well as other significant activities or problems encountered during survey operations. Maintenance and custody of the log will be the responsibility of the Field Leader. Upon completion of the survey activities, the log will be provided to the SAIC Project Manager.

If a significant deviation from the Field Sampling Plan is necessary, the field leader aboard the survey vessel is responsible for noting such deviations in the field log, and notifying the SAIC Project Manager as soon as possible (e.g., via a telephone call to shore during the survey activities). It is the responsibility of the SAIC Project Manager to contact the LAD Project Manager to discuss the deviations and potential alternatives/corrective actions.

Corrections to Documentation

If errors or omissions in the field logs, sample documentation, or COC records are identified by project personnel involved with the survey, these occurrences will be communicated to both the SAIC Project Manager and the QA/QC Officer for the project as identified in the PWP. The need for any significant corrections will first be documented in writing, then corrections will be made in red ink on the original logs, records, or COC forms; additionally, corrections will be dated and signed by the person affecting the change.

Data Management and Security

The SAIC Project Manager will be responsible for security of all field records and project data/information acquired during survey operations. Electronic data files will be stored in the field using the designated standard file-naming format. At the end of each survey day these files will be backed up to disk. Originals of Logs and data records will be maintained in a secure storage facility at SAIC's Newport, Rhode Island, office. Additionally, back-up copies of all digital data will be stored on magnetic medium in an appropriate storage area. Processed data will be maintained in the project Geographic Information System (Disposal Analysis Network -Los Angeles, or DAN-LA) and frequent (i.e., daily) backups of the DAN-LA data archive will be part of the routine procedure for maintenance of the DAN-LA system.

16.1 Quality Assurance/Quality Control (QA/QC)

16.1 Rosette/CTD:

QA/QC of the rosette/CTD-sampling package is ensured by properly following the operating manual instructions for the individual pieces of equipment and sensors and verifying the accuracy of the factory calibration of each sensor at regular intervals during use. The complete system is also bench tested as an integrated whole prior to deployment in the field. The following table summarizes the QC checks that should be performed in the field for the CTD and the transmissometer to verify the accuracy of the factory calibration.

Table 2. Field Quality Control Check Procedures and Acceptance Criteria for the CTD and Transmissometer.

Sensor	Calibration QC Check	Frequency	QC Acceptance Criteria	Corrective Action
Pressure	Record pressure reading on deck	Once prior to survey	On-deck pressure reading should agree with local barometric pressure within 10%	Send instrument to manufacturer for re-calibration
Temperature	Obtain side-by-side reading with a second Seabird temperature sensor	3-6 months	Relative percent difference of side-by-side readings should be less than 10%	Send instrument to manufacturer for re-calibration
Conductivity	Measure conductivity of IAPSO Certified Seawater	Each set of samples	Measured conductivity should be within 10% of IAPSO certified value	Send instrument to manufacturer for re-calibration
Transmissometer	Take light transmission readings in air and with blocked beam path.	Before and after each survey	Air and blocked beam readings should be within 0.2 and 0.002 volts, respectively, of factory calibration values	Send instrument to manufacturer for re-calibration

16.2 Water Samples:

QC for the collection of water samples includes field replicates for TSS, and field replicates and field blanks for p,p'-DDE. Refer to the field sampling plan (FSP) and Quality Assurance Project Plan (QAPP) for details.

17.0 Checklists

No procedural checklists are used for the deployment of this system

18.0 References

General Oceanics, Rosette Multi-Bottle Array System Instruction Manual

Sea Bird Electronics, Inc. 1997. CTD Data Acquisition Software: Seasoft Version 4.224

Sea Bird Electronics, Inc. 1993. CTD System Operating and Repair Manual

WET Labs, Inc. 1996. C Star Transmissometer User's Guide Version 1.0.

Datasonics, Inc. PSA-900 Programable Sonar Altimeter Owner's Manual

SAIC. 2000. Project Work Plan for the Palos Verdes Capping Project

Appendix

This section was intentionally left blank.

Standard Operating Procedure (SOP)
For
Bottom Surge Documentation Using a Sub-Surface Video Camera

Revision 01
July 24, 2000

Prepared by: Greg Tufts — Date: June 16, 2000
Marine Staff Scientist

Reviewed by: Ted Turk — Date: June 23, 2000
Senior Scientist

Approved by: Ray Valente — Date: June 26, 2000
Project Quality Assurance Officer

Science Applications International Corporation
221 Third Street
Newport, RI 02840

Table of Contents

1.0 Scope and Applicability

Real-time video photography is a useful method to visually document the movement of sub-surface near-bottom sediments.

2.0 Summary of Method

An Outland USW-6010 Integrated Color Video System is deployed to monitor sediment transport near the seafloor. Real-time video is fed to a console on the surface for in-situ monitoring and recorded on a S-VHS recording system.

3.0 Definitions

UWC-Underwater Camera. An underwater color video camera capable of collecting underwater video footage at depths up to 3,300 feet.
UWL-Underwater Light. 150 Watt underwater light for deployment upon the UWC.
CON-Console. A topside deck unit that displays, in real-time, the video being collected by the UWC. The console allows the operator to adjust the UWC and UWL (i.e. focus and light intensity). The console also provides the interface for the VCR that is used to record the underwater video footage.

4.0 Health and Safety Warnings

- Life threatening voltages are present in the camera system. Disconnect power before servicing to prevent electrical shock.
- The camera and light should only be opened by qualified technicians in a dry atmosphere with proper tools and work area.

5.0 Cautions

- Insure that voltage does not exceed 130 volts AC to the Console. Also, power source must be properly grounded.
- Do not operate lamp out of water for more than 5 seconds

6.0 Interferences

None identified for this instrument.

7.0 Personnel Qualifications

Individuals who will be maintaining, or operating the video system should be trained and readily familiar with the technical and operational aspects of the equipment as specified in the operation manuals.

8.0 Apparatus and Materials

Outland USW-6010 Integrated Color Video System:

UWC-560 Color CCD Camera
(2) UWL-200 150 Watt Lights
500 ft. Video Cable Marked at One Meter Intervals
CON-3000 Console
S-VHS Video Recorder

Field Materials:

S-VHS video tapes (1 tape per 2 hours of video collection)
Field Log Book
Tool box

9.0 Instrument or Method Calibration

The video system requires no instrument calibration. The only pre-survey checks that need to be completed are checks to ensure that all of the features of the camera (e.g. focus and lights) are in proper working order prior to deployment. Refer to the Video Camera Deployment Checklist in Section 17.0 for to perform these tests.

10.0 Sample Collection, Handling and Preservation

See Data Acquisition and, Calculations and Data Reduction below.

11.0 Sample Preparation and Analysis

This section is not applicable to this method.

12.0 Trouble Shooting

There are generally two trouble shooting problems associated with this system: the camera does not come on, and/or the light does not come on. Refer to the operator's manual for trouble shooting these and any other problems.

13.0 Data Acquisition and, Calculations and Data Reduction

Video data from the camera is fed to the surface via a video cable that is connected to the operating and data collection console. The console contains a color viewing monitor, an S-VHS VCR and camera control panel. The video is monitored in real-time via the monitor. Any adjustments to the camera (e.g. focusing or light intensity) is adjusted accordingly based on the environmental conditions of the survey. The video data is routed directly to the VCR where it is recorded. Real-time audio is overlaid onto the video noting time "markers", significant events and any additional information that is relevant to the video data collection.

14.0 Computer Hardware and Software

There is no additional computer hardware or software associated with this system.

15.0 Data Management and Records Management

15.1 Electronic Data

Electronic video data will be recorded and stored on VCR tapes. These tapes will be labeled accordingly including the survey event (name), date, the time the survey took place and the names of the field personnel that conducted the survey. The tapes will also be referenced to the field logs (described below) for each respective survey.

Field Logs

A hard-copy field log will be maintained for the video surveys. The log will be used to document all recording events, as well as other significant activities or problems encountered during survey operations. Maintenance and custody of the log will be the responsibility of the Field Leader. Upon completion of the survey activities, the log will be provided to the SAIC Project Manager.

If a significant deviation from the Field Sampling Plan is necessitated, the field leader aboard the survey vessel is responsible for noting such deviations in the field log, and notifying the SAIC Project Manager as soon as possible (e.g., via a telephone call to shore during the survey activities). It will be the responsibility of the SAIC Project Manager to contact the LAD Project Manager to discuss the deviations.

Corrections to Documentation

If errors or omissions in the field logs are identified by project personnel involved with the survey, these occurrences will be communicated to both the SAIC Project Manager and the QA/QC Manager for the project as identified in the PWP. The need for any significant corrections will first be documented in writing, then corrections will be made in red ink on the original logs or records; additionally, corrections will be dated and signed by the person affecting the change.

Data Management and Security

The SAIC Project Manager will be responsible for security of all field records and project data/information acquired during survey operations. Originals of Logs and data records will be maintained in a secure storage facility at SAIC's Newport, Rhode Island, office. Additionally, back-up copies of all digital data will be stored on magnetic medium in an appropriate storage area. Processed data will be maintained by the DAN-LA GIS and frequent (i.e., daily) backups of the DAN-LA data archive will be part of the routine procedure for maintenance of the DAN-LA system.

16.0 Quality Assurance/Quality Control (QA/QC)

QA/QC of the video survey is ensured by properly following the operating manual and instructions for the video system. The complete system is also bench tested prior to the deployment. Data capture and significant events (e.g. time markers and observations) that are observed during the survey will be referenced on the tape in real-time using the audio feature of the system.

17.0 Checklists

17.1 Video Camera Deployment Checklist

The following procedures will be completed in order to ensure the proper operation of the video system.

Video Cable

Mark the video cable at one-meter intervals using colored tape. Clearly identify the 5 and 10-meter intervals for easy reference. This method is what will be used to determine and record the depth of the camera. The location of the camera during deployment will be recorded by the SAIC navigation system.

Camera System

1) Plug camera umbilical into camera and light (use good quality silicon grease for lubrication). Plug topside end of umbilical into Control Unit connector on front panel.

2) Verify that supply power is correct (110 VAC, 60 Hz, fused at 5 amperes).

3) Ensure that the camera, light, recorder and monitor switches are in the “OFF” position.

4) Plug Console into power source.

5) Turn monitor, recorder and camera switches “ON”. Within 60 seconds a picture will appear.

6) Adjust Focus Control to get a clear picture.

7) Ensure “LIGHT INTENSITY” is at “MIN” position.

8) Turn light switch “ON”. Turn “INTENSITY” up to test light.

9) Turn back to “MIN” and turn switch “OFF” (DO NOT OPERATE LAMP OUT OF WATER FOR MORE THAN 5 SECONDS).

10) With power “ON” deploy the camera unit.

- Lower the camera and light unit into the water, just below the surface.
- Turn on lights by repeating steps 7 and 8.

- Continue lowering the camera to the desired depth using the depth marks on the camera cable.
- Record depths at regular intervals during deployment (e.g. when every 5 meters of cable are let out) in both the field log and by using the audio feature of the recording system.
- When nearing the bottom with the camera, proceed very slowly to prevent submerging the camera in the bottom sediments.

11) When ready to begin recording follow steps 13-15 below.

Recording System:

12) Press "EJECT" on the recorder.

13) Load S-VHS into recorder and press into position.

14) Press "RECORD" and hold while simultaneously pressing "PLAY"

Note: For highest quality recordings use the SP or 2 hour recording speed mode.

18.0 References

Outland Technology, Inc. Diver Color Video System Model UWS-6010 Operator's Manual.

Appendix

This section intentionally left blank.

STANDARD OPERATING PROCEDURE (SOP)
FOR BROADBAND ACOUSTIC DOPPLER CURRENT
PROFILER (BBADCP) SURVEYS OF DREDGED MATERIAL
PLACEMENT OPERATIONS

Prepared by: Michael Tubman Date: June 30, 2000
Research Physical Scientist, USACE-WES

Reviewed by: Ted Turk Date: July 12,2000
SAIC Senior Scientist

Approved by: Ray Valente Date: _____
Project Quality Assurance Officer

Table of Contents

1.0 Scope and Applicability of the BBADCP Survey

A BBADCP survey of an area where dredged material placement is being conducted is useful for qualitatively determining the spatial and temporal distribution of suspended sediments resulting from the placement operation. The scattering of acoustic energy by sediment particles suspended in the water column produces acoustic signals that can be measured by the BBADCP. The successful use of the method requires that the acoustic signals from the suspended sediment associated with the placement operation be clearly distinguishable from signals produced by other acoustic scatterers. Other acoustic scatterers include suspended sediment unrelated to the placement operation, plankton, and air bubbles. The method is not suitable for areas where the acoustic signals from other scatterers result in spacial and temporal distributions that are similar to those produced by the suspended sediment from the placement operation.

In addition to determining the distribution of suspended sediment from a dredged material placement operation, a BBADCP survey can acoustically measure current speed and direction for calculations related to the transport of suspended material. The BBADCP measures water motion relative to its own acoustic sensors, and can track its motion relative to the seafloor. Thus the relative water motion from the BBADCP's movement can be determined and subtracted from the measured water motion to produce measurements of current speed and direction. When the BBADCP can track bottom, a survey is useful for measuring currents over a wide area, and measuring current variations with depth. The BBADCP can track bottom when the bottom is hard and the instrument is located less than 60 m off the bottom. Accurate measurements of current made while the instrument is tracking bottom require that the survey be conducted at a speed of less than 2 m/s, and that it be conducted along straight survey lines. When the BBADCP cannot track bottom, single point measurements of current speed and direction with depth down to less than 60 m can be made. This requires that the instrument be kept at a single position for at least 1 min, and position data from a Differential Global Positioning System (DGPS) capable of at least +/- 1 m accuracy be recorded with the BBADCP data. The DGPS data are used to correct for the inaccuracy of not being able to keep the instrument at a fixed position. For both bottom-tracking and non-bottom-tracking data acquisition, the BBADCP records quality data only when its sensors are pointing straight down toward the seafloor within +/- 20° from the vertical. It is not suitable for measuring current speed and direction when waves or other motions cause frequent variations in sensor orientation outside the 20° specification.

2.0 Summary of Method

The BBADCP is either mounted rigidly to the side of a survey vessel or in a hydrodynamically-stable tow body. When surveying using the tow body, the BBADCP is towed behind the survey vessel below the

vessel's wake on an electro-mechanical cable along straight survey lines that start and end outside the area of interest. The BBADCP measures a vertical profile of acoustic signals from depths less than 60 m below it. The profile is composed of measurements representing 0.5-m depth cells. The maximum depth to which these signals are useful depends on site-specific conditions related to the turbidity, and the temperature and salinity of the water.

Immediately before a placement operation, repeated transects are made across the placement area to determine the magnitude and variation of the naturally occurring acoustic background. If the depth of the area is greater than the depth at which the BBADCP can track bottom, the instrument is mounted in a tow body and the background survey is conducted with the instrument towed at multiple depths so that a complete vertical profile (i.e., near-surface to bottom) can be surveyed. Current speed and direction in a layer extending to less than 60 m above the bottom are surveyed along the transects as the instrument tracks bottom. Several point measurements of current speed and direction are made in the area for any additional layers of depth that are above the depth at which the BBADCP can track bottom.

During and after the release of dredged material, transects are made to measure the extent of suspended sediments that result from the placement operation. Current shear normally causes the near-surface suspended sediments to be transported at a faster rate than the near-bottom sediments. Therefore to successfully track the movement of suspended sediments over time, it is normally necessary to concentrate on a single layer where the transport does not vary greatly with depth. The background acoustic measurements are subtracted from the measurements made during and after the placement operation, and the differences are divided by the standard deviations of the background variations as determined from the repeated transects made prior to the placement operation. This results in values of acoustic backscatter above background (ABAB) which are used to map the extent of the suspended sediments resulting from the placement operation.

3.0 Definitions

BBADCP (see Figure 3-1) – Broad Band Acoustic Doppler Current Profiler. An instrument that can detect the scattering of acoustic energy by sediment particles suspended in the water column. The BBADCP can acoustically measure current speed and direction for calculations related to the transport of suspended material by measuring water motion relative to its own acoustic sensors, and by tracking its motion relative to the seafloor.

DGPS – Differential Global Positioning System. A precise navigational system used for vessel positioning that utilizes the U.S Government-maintained Global Positioning System (GPS) and real-time United States Coast Guard differential correction data.

Acoustic Backscatter – Acoustic backscatter is the acoustic energy scattered by the aquatic medium that is sent back to the BBADCP.

ABAB (Acoustic Backscatter Above Background) is the acoustic backscatter measured during a survey that exceeds values recorded during a prior background survey.

Broad Band is a term used by the manufacturer of the BBADCP (RDI) to differentiate the instrument from an earlier model which used acoustic energy over a smaller(i.e., narrower) range of frequencies.

The following abbreviations are used for units of measure:

m - meters
Hz – Hertz
ppt – parts per thousand
Pa – Pascal
^{o}C – degrees Celsius
s - seconds

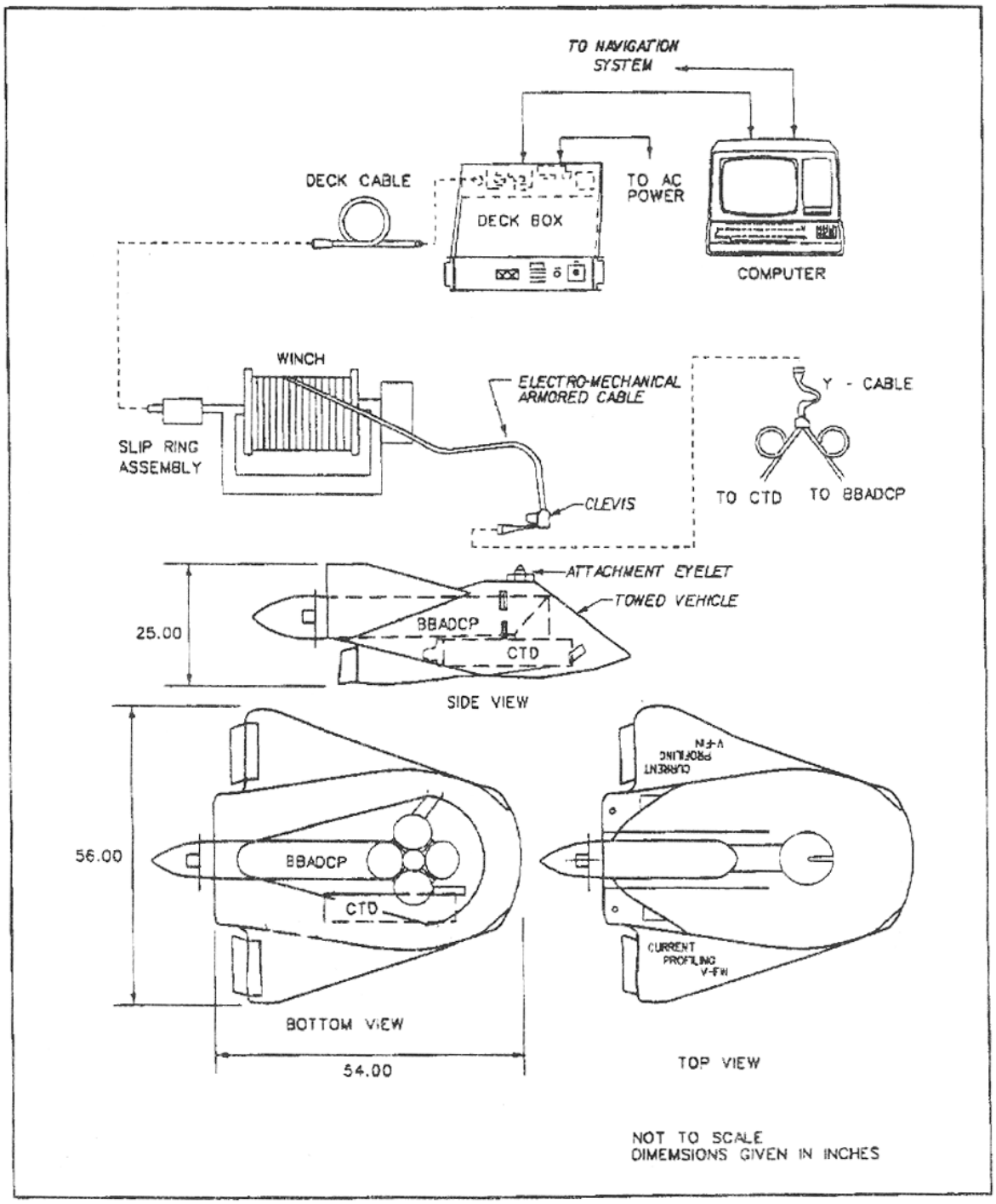

Figure 3-1. Schematic diagram of the BBADCP System.

4.0 Health and Safety Warnings

Hardhats, life jackets, and steel-toed shoes are required when working on the vessel's deck to deploy and recover the BBADCP. An A-frame and a hydraulic winch are required to lift the tow body in and out of the water. When the BBADCP is mounted on the side of the survey vessel, a hand winch is required to lift the instrument out of the water.

5.0 Cautions

When the BBADCP is mounted to the side of the vessel and the instrument is in the water, or when the instrument is being towed, the vessel speed should not exceed 2.0 m/s. When it is necessary for the vessel to go at speeds greater than 2.0 m/s, a side-mounted BBADCP should be lifted up, out of the water, and secured. For a BBADCP in a tow body, the tow body should be placed on the deck and secured when vessel speeds exceed 2.0 m/s. Failure to do this can result in loss of the instrument, or loss of the tow body and instrument. Neither the side-mounted or towed BBADCP should be used in heavy seas. The side mount can be broken when the survey vessel is rocking. When seas are too great, the cable going to the tow body can get a loop in it. The loop will damage the cable and may cause it to break. The potential for getting a loop in the cable is greatest when the tow body is being raised or lowered. Unsuitable operating conditions depend on the size and type of survey vessel used, as well as site-specific parameters such as current, and must be assessed by the BBADCP operator in the field. When towing the BBADCP, caution needs to be taken not to have the tow body hit the bottom. The danger of the tow body hitting bottom is greatest when the vessel suddenly slows down, or while it is making a turn. The tow body should be raised when a survey is being conducted near bottom and a turn is made. The vessel needs to turn gradually so as not to put a sharp bend in the cable. Failure to take these precautions when towing the BBADCP can result is loss or damage to the system.

6.0 Interferences

Acoustic scatterers unrelated to the dredged material placement operation may show up as ABAB and make mapping of the suspended sediment from the placement operation difficult, and in some cases impossible. The effect of acoustic scatterers that do not change location or vary in concentration during the process of measuring the background and surveying after the placement operation, will be removed when the background is subtracted. Likewise, persistent variations in acoustic background that are relatively small in comparison to the acoustic signals from the suspended sediment related to the placement operation

are taken into account in the process of calculating ABAB. However, large, sudden variations in background that take place during the mapping operation will cause problems. Some examples of potential sources of these variations are naturally occurring suspended sediment varying with current flow, air bubbles in the wakes of passing ships, and clusters of zooplankton carried through the survey area by currents. The passage of ships and the locations of their wakes during the survey should be logged and noted in the data presentations. The presence of clusters of zooplankton, and/or large variations in natuarally occurring suspended sediment in the area, will probably be observed during the background survey, but little can be done to differentiate them from the acoustic signals from the sediment put into suspension by the placement operation.

Cross-sections of Acoustic Backscatter Above Background (ABAB) that include data from the wakes of boats observed during the survey will be noted in text that accompanies the presentations of the transects. If ABAB from zooplankton clusters is observed in the survey area during the background survey prior to a placement event, all data taken during the survey after the placement event from the general depths where the ABAB from zooplankton was observed will be rejected. The tilt and roll of the BBACP is recorded with the current data. The postprocessing software rejects current data where the tilt or roll exceeds 20 degrees.

7.0 Personnel Qualifications

The BBADCP operator should have completed the manufacturer's (RD Instruments) one-week training course in the operation of the instrument, or have received classroom, workshop, and field training from personnel who have completed the course. The training should consist of the theory of operation of the instrument, setup and test procedures, and offshore operations training. Operators who are trained in the use of the instrument should have general knowledge of basic electronics, use of computers for data acquisition, and be experienced in at-sea operations for collecting oceanographic data.

Data analysis should be conducted by personnel with Bachelor of Science Degrees, or higher, in engineering, mathematics, or oceanography, or equivalent experience. Personnel should have experience in the analysis and interpretation of BBADCP data, and have general knowledge of software, computer techniques, underwater acoustics, and physical oceanography.

8.0 Apparatus and Materials

The BBADCP system consists of the following:

1. BBADCP
2. side-mount or tow body
3. tow cable and winch (when towed)
4. deck cable
5. control unit
6. data acquisition and analysis computers
7. DGPS
8. pressure sensor (when towed)
9. BBADCP data acquisition and acoustic processing software

9.0 Instrument or Method Calibration

The BBADCP is a 5-beam, 600-kHz , Broad Band Acoustic Doppler Current Profiler manufactured by RD Instruments (RDI) in San Diego, CA. Four of the beams are mounted at a 20-degree angle from the vertical, and are used to measure current speed and direction. The 5-th beam points straight down and is used solely for measuring acoustic signals from the suspended sediment resulting from the dredged material placement operation.

10.0 Sample Collection, Handling and Presentation

This section is not applicable to this Standard Operating Procedure.

11.0 Sample Preparation and Analysis

This section is not applicable to this Standard Operating Procedure.

12.0 Trouble Shooting

The BBADCP manual, provided by the manufacturer (RDI), contains a section on trouble shooting. In addition, the BBADCP's firmware contains self-tests that can be run which will define certain problems with the system, if any should be present.

13.0 Data Acquisition, and Calculations and Data Reduction

Data from the BBADCP is transmitted by cable to a computer and recorded during the survey. The magnitude of the acoustic signals, and the current speed and direction, can be displayed during the survey, but only raw data is recorded, and must be processed to produce final data products. Data are recorded on the computer's hard drive, and displayed during the survey using software supplied with the system by RDI.

During the survey, a log book should be kept to record the designation of each survey line, the start and end data record for each line, the data file name, and the start and end times of each line. Additional notes should include information about the placement operation, the presence of boat wakes in the area, and any other information related to the data. If single-point current measurements are made, the log should give the tow body depth, and the start and end locations and times for the measurements. The navigation data, and the instrument operating parameters, are automatically recorded with the BBADCP data.

Immediately after each survey, the data recorded on the computer's hard drive should be copied onto computer diskettes and stored in a safe place. The data on these computer diskettes are copied onto the hard drive of the computer used for the data analysis.

The data are analyzed using software developed by the Coastal and Hydraulics Laboratory (CHL) at the U.S. Army Engineer Research and Development Center (ERDC). Corrections for absorption losses are done in postprocessing. Temperature and salinty data for these corrections will be derived from the CTD profiling measurements made when taking water samples. The quality of these data are discussed under the SOP for the CTD profiling and in the Project Quality Assurance Project Plan.

The steps in the analysis are as follows;

1. A single file giving the time, location, bottom depth (if bottom tracking), and tow body depth (if towed) for each data sample is created for each survey line.
2. The acoustic signals are corrected for geometric spreading and absorption losses of acoustic energy by adding the lost energy back to the measurements. The losses are calculated using the following equations:

Geometric spreading loss (dB) = $20\log_{10}(r)$
where r is the distance along the beam (m)

$$\text{Absorption loss (dB)} = \{8.686 \frac{f^2}{F}[\frac{2.34\text{x}10^{-9}S}{(1 + f^2/F^2)} + 3.38\text{x}10^{-9}](1- 62.46P)\}r$$

where: f is the acoustic frequency (600 kHz)
S is the salinity (ppt)
P is the pressure (Pa)

F is the relaxation frequency = $21.9 \times 10^{[9 - 1520 / (T + 273.15)]}$
where T is temperature (^{o}C)

3. A single file of corrected acoustic energy for each 0.5 m bin for each data sample is created for each survey line.
4. The repeated background files are averaged for each depth at each sample location for each survey line and the standard deviation for all locations along each survey line at each depth are calculated. The background averages are stored in a background file for each survey line. The standard deviations are stored in a background variation versus depth file for each survey line.
5. Values of ABAB are calculated for each line surveyed during and after the placement operation by subtracting the appropriate average background measurements at each location and depth and dividing by the standard deviation for each depth.
6. Vertical and horizontal sections of ABAB can be plotted to map the suspended sediment from the placement operation.

14.0 Computer Hardware and Software

Data acquisition during the survey is performed using a desktop personal computer (PC) with a 486 processor and software provided by the manufacturer (RDI). Data analysis is performed on a laptop PC with a Pentium III processor and software developed by CHL-ERDC.

15.0 Data Management and Records Management

The files described in Sections 13.0 – 1., 3., and 4., are stored on diskettes in directories with “readme” files that identify the survey lines for the data. The field log is kept in a bound book.

16.0 Quality Control and Quality Assurance

At the beginning of each survey day, a test program supplied by the manufacturer (RDI) is run to check for proper operation of the BBADCP system. During the survey the status of the DGPS is checked frequently to assure that differential signals are being received and that there are sufficient number of satellites in view

to achieve the desired accuracy. During each step of the data processing, qualitative checks of the results are made to check their reasonableness.

17.0 References

Tubman, M. W., and W. D. Corson (1999) " Monitoring of dredging related suspended-sediment plumes, "*DOER Technical Notes Collection* (TN DOER E-7), U.S. Army Engineer Research and Development Center, Vicksburg, MS. www.wes.army.mil/el/dots/doer

Puckette, T. P. (1998) "Evaluation of dredged plumes, physical monitoring techniques," *DOER Technical Notes Collection* (TN DOER-E5), U.S. Army Engineer Research and Development Center, Vicksburg, MS. www.wes.army.mil/el/dots/doer

Clay, C. S., and H. Medwin (1977), *Acoustical Oceanography*, John Wiley and Sons, New York.

Stephens, R. W. B. (1970), *Underwater Acoustics*, R. W. B. Stephens, ed., Wiley – Interscience, London, 1-21.

RD Instruments (February 1995) – *Direct Reading and Self-Contained Broadband Acoustic Doppler Current Profiler.*

LABORATORY SOPs

Standard Operating Procedure (SOP)
for
Vane Shear Analysis; Wykeham Farrance International Laboratory Vane with Motorized Unit

Revision 01
July 24, 2000

Prepared by: Pamela Walter — Date: June 16, 2000
Marine Staff Scientist

Reviewed by: Ted Turk — Date: June 23, 2000
Senior Scientist

Approved by: Ray Valente — Date: June 26, 2000
Project Quality Assurance Officer

Science Applications International Corporation
221 Third Street
Newport, RI 02840

Table of Contents

1.0 Scope and Application

The laboratory vane test for direst measurement of the shear strength of soil samples in the laboratory. The laboratory apparatus has vanes measuring from 12.7 by 12.7 mm to 24.5 by 24.5 mm. Vane size is determined by the softness of the material to be measured, with larger vanes being used to measure very low shear strengths. Shear strength measurements may be conducted in whole and half cores as well as in soft remoulded soils, for instance in a compaction mould.

2.0 Summary of Method

Shear strength is a calculated value based on degree of spring deflection (inner) and degree of rotation of the vane (outer). Softer material requires a larger vane and soft spring, while firmer material requires a stiffer spring and smaller vane. This SOP for vane shear testing is based on ASTM D4648.

3.0 Definitions

Vane Shear – A laboratory test for the direct measurement of shear strength of soil samples. The apparatus used to determine vane shear (Figure 3-1) measures the resistance of soil samples when force is applied to the sample via different size vanes coupled with an adjustable spring tension system.

Figure 3-1. Photographs of the Wykeham Farrance International Laboratory Vane with Motorized Unit at rest (left) and in operation (right).

4.0 Health and Safety Warnings

Standard laboratory protective clothing and eye covering as required by the material being tested. As with any motor, hands, hair and clothing must be kept away from moving equipment.

5.0 Cautions

Material must remain undisturbed.

Vane must be cleaned between samples. The vane is cleaned by wiping it with a clean, dry cloth to remove all traces of any adhering sediment.

The vane should not touch the core liner, sit on the bottom, scrape the side wall of the core or be above the surface of the sediment.

Do not rotate the graduated scales opposite one another when zeroing.

6.0 Interferences

This section intentionally left blank.

7.0 Personnel Qualifications

Technician should be trained in the method before initiating the procedure alone.

8.0 Apparatus and Materials

- The laboratory vane apparatus is self-contained and consists essentially of the following components:

  a) Frame, stand and baseplate.
  b) Vane mounting assembly.
  c) Handle for raising and lowering of the vane assembly by means of the square-thread lead screw.
  d) Vane, with four blades usually 12.7 by 12.7 mm.
  e) Handle for rotating vane head, which applies torque to the vane shaft, fitted with a motor for consistent torque.
  f) Graduated scales, marked in degrees, one on the fixed vane head, the other rotating with the vane.
  g) Vertical shaft attached to knob fitted with pointer carrier on friction sleeve.

- Set of calibrated springs of different stiffness, to allow for a range of soil strengths.
- Calibration chart for springs. Calibration curves for springs to calculate torque.
- Vanes of various sizes for different sediment types.
- Stable surface to support core for testing.

9.0 Instrumentation or Method Calibration

- Selection of torsion spring

  a) The torsion spring to be used should be selected after examining the sample and assessing its range of probable shear strength.
  b) For very soft materials a lighter or softer spring should be used, No. 1 or No. 2. For heavier materials No. 3 or No. 4 may be appropriate (when dealing with dredged material spring No. 1 is generally used).
  c) Record the number of spring used; include the serial number with the spring number.

- Installation of spring

  Fit the torsion spring so that the square end faces down; this allows the shaft to be inserted to its full extent.

- Installation of vane

  a) Secure the shaft of the vane into its socket, and tighten the fixing screw.
  b) To check that the spring and vane are correctly fitted, hold the vane between thumb and finger to prevent rotation, and turn the torsion drive handle a little way with the other hand.
  c) The tendency of the vane to rotate should be left.

- Adjustment for half core analysis

  Slacken the nut on the base of the pillar unit, swivel the unit 180 degrees so that the base and torsion head are on opposite sides of the pillars, and re-tighten the fixing nut. Keep hold of the pillars until counterbalance weights have been added to the baseplate.

- Zeroing of graduated scales

  a) Remove the motor belt (make sure the motor is off) and turn the hand crank so that 360 degrees on the inner scale aligns with zero degrees on the outer scale.
  b) Move the pointer so that the inner and outer needles point to 360 and 0 degrees respectively.
  c) Steady the handle while reattaching the motor belt.
  d) Make any fine adjustments. Turning the motor on for final alignment works well, but make sure the vane is NOT in the sample.

10.0 Sample Collection Procedure

- Prepare sample.
- Secure core half in place for testing.
- Select spring and record both spring number and serial.
- Prepare apparatus by zeroing graduated scales and pointer.
- Lower vane with hand crank until blades are just below the surface of the material, making sure that the blades do not touch the bottom of the sample tube or the sides.
- Measure shear strength by turning on motor (record time) and monitoring graduated scales. When the inner pointer stops moving along the scale, the soil has sheared. At this point failure occurs and the torque decreases, but the pointer remains in the position indicating the maximum angular deflection of the spring, from which the vane torque at failure can be calculated. Stop the motor immediately and record the time, degree indicated by the inner pointer, and the degree of rotation noted by the outer pointer when the soil sheared. This measurement may have occurred moments before the motor was stopped, so record the lowest degree of rotation on the angular scale reading to the nearest half degree, which coincides with the stopping of the inner pointer.
- If the spring deflection reaches 100 degrees, or the upper limit imposed by the manufacturer, discontinue the test and repeat with a stiffer spring.
- If the inner pointer does not move from zero, try again. Shells, worms and other debris can alter shear strength; be careful to record where these items occur in the sample.
- If a shear strength result appears extremely different or out of character for the material being sampled, take an additional reading.
- Remove the vane from the sample by raising the hand crank.
- Clean the vane by wiping it with a clean, dry cloth until all adhering sediment is removed.
- Prepare the apparatus for another sample by zeroing the graduated scales, always turning the device in a clockwise position. Do not turn the graduated scales opposite one another.
- Position the vane for another sample no closer then the width of the vane from the last sample.

11.0 Sample Preparation

- Half core method
- Use core splitter to cut core in half vertically
- Pull piano wire between core halves to separate
- Section core in two, making sure that at least one half is relatively undisturbed
- Place undisturbed core half under sampling device and follow sampling procedure

12.0 Trouble Shooting

Sediment shear strength can have high variability within a small distance (centimeters)

Sand, shells, rock, worms, hair and other objects found in the sediment can interfere with the shear strength, note all miscellaneous materials

Retest as close as possible when results appear abnormal with no apparent source.

Make sure vane is not resting on core liner.

13.0 Calculation of the Shear Strength

The shear strength of a soil sample is calculated using the following equations:

- **S= M/K**

S= Shear strength in kN/m^2
M= Torque in N m
K= constant for the vane size used

- Calculating K

$K= \pi (D^2H/2) (1+D/3H) \times 10^{-6}$
D= width of vane
H= height of vane

- Vane 12.7 X 12.7 mm

K= 0.004290

- Vane 12.7 X 25.4 mm

K= 0.00750776

- Vane 12.7 X 19.0 mm

K= 0.005886252

- Calculating M

$M= C_s\theta_f$
M= is the applied torque (N mm)
C_s= is the calibration factor (N mm/degree) for the spring being used obtained from calibration data.
θ_f = is the reading indicated by the pointer on the inner scale after each test gives the relative angular deflection of the ends of the spring failure.

14.0 Computer Hardware and Software

Microsoft Excel or comparable program

15.0 Data Management and Records Management

The following information is recorded in a laboratory notebook while the vane shear measurements are being made in the core processing facility: degree of inner and outer rotation and any observations that might influence the vane measurements.

The following records are also maintained by SAIC:

Calculation of spring calibration data

Spreadsheet of raw data conversion to final shear strength

16.0 Quality Assurance/Quality Control (QA/QC)

- Use Calibrated springs
- Follow SOP
- Use motor for constant turning rate and pressure

17.0 Checklist

- Sediment sample
- Motorized vane unit
- Various sizes of vanes
- Various torsion springs
- Laboratory notebook
- Clean, dry cloth to wipe the vane clean between samples
- Calculator or computer for calculations

18.0 References

Wykeham Farrance International WF23500, Laboratory Vane Equipment Manual.

ASTM D4648-97; Standard Test Method for Laboratory Miniature Vane Shear Test for Saturated Fine-Grained Clayey Soil. Sept. 15, 1994. Publication October 1994. Originally published as D 4648-87. Vol. 04.08.

APPLIED MARINE SCIENCES, INC.
Standard Operating Procedures AMS-PGS93
Prepared By: Kenneth S. Davis

DETERMINATION OF PARTICLE SIZE DISTRIBUTION (PHI SIZE CLASSIFICATION) IN SEDIMENT SAMPLES

1.0 INTRODUCTION

This document describes a method to determine disaggragated particle size distribution in marine sediments. This method, which has been adapted from Plumb (1981), characterizes marine sediments in terms of phi size for particle size distribution (full phi distribution). With the phi size distribution values, mean grain size, silt-clay fraction, coarse fraction, skewness, sorting, and kurtosis are calculated.

2.0 APPLICATION

This procedure applies to all field and laboratory based activities involving the analysis of grain size. It includes training, field sampling, chain-of-custody and specifically laboratory operations.

3.0 REFERENCE

Plumb, R.H., 1981. Procedure for Handling and Chemical Analysis of Sediment and Water Samples. Technical Report EPA/CE 81-1, prepared for by Great Lakes Laboratory, State University College at Buffalo, NY, for the U.S. EPA/Corps of Engineers Technical Committee on Criteria for Dredged and Fill Material. Published by the U.S. Army Engineers Waterways Experiment Station, CE, Vicksburg, MS.

4.0 PREPARATION

4.1 Introduction

Particle size distribution is a cumulative frequency distribution or a frequency distribution of the relative amounts of sediment in a sample within specified size ranges. The size of a discrete particle is characterized as a linear dimension and designated as a diameter. The use of sieves and settling tubes as described in this procedure results in description of sediments based on shape, size, and density of particles.

4.2 Sample Collection, Preservation, Storage, and Holding Times

4.2.1 Sample Collection

Sediment samples are collected in the field according to project specific sampling Quality Assurance/Project Plans. After collection, sediment samples are shipped at 4°C to the laboratory.

4.2.2 Sample Storage

Samples scheduled for particle size analysis are stored in either plastic or glass containers. The samples are maintained at 4°C but never frozen prior to analysis.

4.2.3 Sample Holding Time

Samples stored by refrigeration have holding times of not more than six months.

5.0 APPARATUS AND MATERIALS

Due to the widely ranging particle sizes that may occur within samples, analysis of marine sediments often requires utilization of two very different methods; sieving of the fraction coarser than 63 microns and gravimetric pipetting of the fraction finer than 63 microns. A listing of equipment and materials used to perform this analysis is covered in Section 5.1. Quantities of equipment needed to analyze one sample are shown in parentheses ().

5.1 Labware and Apparatus

1. 1-liter mason jars with screw cap lids (1)
2. Electronic analytical balance (accurate to 0.1 mg)
3. 63 micron sieve (1)
4. 25 ml transfer pipette (1)
5. 150 ml glass beaker (1)
6. 50 ml glass beaker (6)

7. 8" plastic funnel (1)

8. ring stand (1)

9. 1-liter graduated cylinder (1)

10. Petri dish to cover cylinder (1)

11. Nylon brush (1)

12. Stir rod (1)

13. Drying Oven at 70°C (±10°C)

14. Sieve Shaker

15. 500 ml wash bottle

16. Ten U.S. standard testing sieves (1-1/4", 5/8", 5/16", #5, #10, #18, #35, #60, #120, #230)

5.2 Reagents

1. Deflocculent Solution = a nominal 0.25 N sodium hexametaphosphate solution. Prepare the solution by dissolving 2.5 to 3.5 grams of sodium hexametaphosphate in 1 liter of deionized water.

2. 30% Hydrogen Peroxide (optional)

3. Distilled Water

6.0 PROCEDURE

6.1 Initial Treatment

1. Upon receipt of particle size analysis from client, individual sample identity (ID) numbers are checked against Chain-of-Custody forms.

2. At the laboratory performing the particle size analysis, data sheets are filled out with Contract Name, Date Received, and Lab Sample ID.

3. Samples are refrigerated at 4°C until analysis.

6.2 Preparation of Sample

1. Mix the wet sample thoroughly in its original container or transfer sample to a suitably large container to enable good homogeneous blending.

2. Weigh approximately 20 to 50 g of sediment into the 1-liter mason jar.

3. If organic material is to be removed, add 10 ml of 30% hydrogen peroxide to the jar and sediment.

4. Fill out the data sheets (i.e. sample weight and defloc concentration)

5. Add approximately 200 ml of deflocculent solution to the jar and seal.

6. Shake jar repeatedly to disaggregate the sample.

6.3 Wet Sieving

1. Prepare fresh deflocculent solution (ca. 2.5 to 3.5 grams sodium hexametaphosphate per liter of distilled water) for each set of samples. Agitate deflocculent solution periodically during wet sieving process.

2. Place 63 micron screen over plastic funnel supported by ring stand over a 1-liter graduated cylinder.

3. Shake the sample and pour onto the screen.

4. Rinse the sample jar and lid with deflocculent from wash bottle until all residual sediment has been removed.

5. Using light finger pressure on wash bottle, wash fines through the sieve with deflocculent.

6. Concentrate the sample against bottom lip of tilted sieve with wash bottle.

7. Rinse the coarse fraction with deflocculent into a numbered 150 ml glass beaker.

8. Rinse bottom of screen with deflocculent into funnel. Rinse the funnel with deflocculent into the graduated cylinder.

9. Dry the 150 ml beaker (coarse fraction) in oven at 70°C.

10. Fill cylinder to approximately 975 ml with deflocculent solution.

11. Cover graduated cylinder with petri dish and store at room temperature until needed.

6.4 Sieve Analysis for Coarse Fraction

1. Transfer coarse fraction from the 150 ml beaker to the top sieve in the sieve stack that is arranged in descending order.

2. Gently brush the beaker clean.

3. Shake the coarse fraction gently to break up aggregates.

4. Cover the sieve stack.

5. Place sieve stack in sieve shaker and shake for 15 minutes.

6. Remove sieves and take to weighing room.

7. Invert top sieve and empty on to a large piece of paper.

8. Brush sieve clean over paper.

9. Tare an empty plastic weighing boat.

10. Pour material from paper into tared weighing boat.

11. Weigh material.

12. Record weight on data sheets corresponding to size fraction.

13. Invert the next sieve and brush clean over paper.

14. Add material to tared weighing boat.

15. Weigh material from both sieves together to obtain a cumulative weight.

16. Record weight from both fractions at the next smallest fraction size.

17. Repeat Steps 13 through 16 until only the bottom pan remains.

18. Add bottom pan fraction (less than 63 microns) to the corresponding graduated cylinder.

6.5 Pipette Analysis for Silt-Clay Fraction

1. Fill numbered graduated cylinders to 1000 ml with deflocculent

2. Record 50 ml beaker weights and date on data sheets.

3. Agitate the sample for one minute with plunger.

4. Remove plunger and rinse to waste with distilled water.

5. Allow the sample to remain undisturbed for 20 seconds.

6. Withdraw the aliquot with pipette (25 ml) from a depth of 20 cm and deposit aliquot into beaker.

7. Rinse the pipette into the beaker with distilled water.

8. Allow the sample to remain undisturbed for an additional 55 minutes 18 seconds from the time of plunging.

9. Withdraw the aliquot with pipette (25 ml) from a depth of 10 cm and deposit aliquot into beaker.

10. Rinse the pipette into the beaker with distilled water.

11. Withdraw three aliquots with pipette from stock deflocculent solution and transfer to three separate beakers for specific calculation of the defloc factor.

12. Place the beakers in drying oven (105 ± 2 °C) until dry.

13. Remove the beakers from drying oven and place in desiccator until cool (1 hour minimum, 15 hours maximum).

14. Open desiccator only to remove beakers. Reseal after each beaker has been removed.

15. Remove beakers one at a time and record weight on the data sheet.

16. Subtract initial beaker weight from final beaker weight. Complete data sheet.

6.6 Factors Used in Analysis

6.6.1 Calculations of Pipette Calibration Factor

The pipette analysis of the silt-clay fraction is based on the premise that each withdrawal of material from the 1-liter cylinder is the same volume, roughly 25 ml. The dried residual represents 1/40th of the dissolved and suspended material present within the settling cylinder at a specific time, hence precise calculation of pipette volume is necessary to preclude large errors in final weights.

1. Fill the pipette with 24°C distilled water.

2. Drain the pipette into a clean, pre-weighed 50 ml glass beaker.

3. Repeat steps 2 and 3 nine (9) more times.

4. Weigh full beakers to 0.1 mg.

5. Subtract initial beaker weight from final beaker weight, and calculate mean water weight (n=10).

6. Pipette Calibration Factor = (40) * (mean water weight)/25.

6.6.2 Calculation of Defloc Factor

Since a deflocculent solution is added to each sample during the analysis process, it is necessary to remove the weight contribution of the deflocculent from the size fractions calculated from the pipetting procedure. This is done as follows:

1. During a pipetting run of samples, remove a 25 ml sample of deflocculent mixture three times with the pipette and drain each into pre-weighed, clean, 50 ml beakers.

2. Process the three beakers in the identical manner as the sediment samples.

3. Calculate a mean deflocculent weight (n=3).

4. Defloc Factor = (Pipette Calibration Factor) * (mean deflocculent weight).

6.6.3 Phi Value Calculations and Calculation of Statistical Parameters

A computer program is used to process the raw data generated by the laboratory procedures. The program calculates the percentages of each of the phi sizes and generates statistics describing the data. For phi sizes greater than a phi value of 4 (i.e. those fractions analyzed by pipette analysis), the raw weight of the particular phi size is calculated using the following equation:

$$\text{Phi Weight} = [(\text{Beakwt2} - \text{Beakwt1}) \times 40] - \text{Defloc}$$

where:

Beakwt1 = Tare weight of empty beaker (g)
Beakwt2 = Weight of beaker and sample (g)
Defloc = Deflocculant factor (g/L)

For all phi values, the sample weight is then calculated:

$$\text{Sample Weight}_i = \text{Phi Weight}_i - \text{Phi Weight}_{i+1}$$

This weight is used to determine the cumulative weight and frequency weight at each particular phi size:

$$Cum_i = (Sample\ Weight_i) + Cum_{i+1}$$

$$Freq_i = (Sample\ Weight_i / Total\ Weight)$$

where:

i = Number of phi weights measured
Total Weight = weight of sample analyzed

The distribution of phi size fractions is used to calculate the required statistics. First, phi size values for the 5th, 16th, 25th, 50th, 75th, 84th, and 95th percentiles are interpolated using the distribution of phi sizes measured. These percentiles are then used to solve the following equations:

Phi Mean Diameter ($M\phi$) = $(\phi16+\phi50+\phi84)/3$
Phi Standard Deviation (ϕ) = $[(\phi84-\phi16)/4]+[(\phi95-\phi5)/6.6]$
Phi Kurtosis Measure ($\beta\phi$) = $(\phi95-\phi5)/2.44(\phi75-\phi25)$
Phi Skewness ($\sigma\phi$) = $[(\phi16+\phi84-2\phi50)/2(\phi84-\phi16)]+[(\phi5+\phi95-2\phi50)/2(\phi95-\phi5)]$

Finally, the grain diameters are calculated for each of the phi sizes and the phi size fractions are converted to percentages before being written to the file used for the establishment of the data into a database:

% Gravel = (sum<-1ϕ/totwt)100
% Sand = (sum -1 to 4ϕ/totwt)100% Silt = (sum 4 to 8 phi/totwt)100
% Clay = (>8ϕ/totwt)100
Cumulative % = Cum(i) x 100
Individual % = Freq(i) x 100
where i = number of phi weights measured.

6.7 Quality Assurance/Quality Control

Changes in the distribution of the grain sizes of sediments could be a signal of short and/or long term influence on the sedimentation process. Because any effects of these processes could be subtle with long-range implications, it is important to maintain a procedure that has the highest precision and minimizes the effects of multiple analysts.

6.7.1 Sample Tracking

Sample tracking and chain of custody procedures are used for grain size analysis sample control. A unique number is assigned to each sample split and is used to track the samples. Sample split containers are sent to the laboratory in coolers and may be sealed with Custody Seals which would be initialed and dated by the packer. Upon receipt, custody seals are closely inspected to insure the validity of the chain of custody information. ID codes and the date the samples were received are entered onto data forms upon receipt of samples.

6.7.2 Duplicate Analysis

One duplicate sample will be analyzed with every batch of 20 samples, or with every sample set, whichever is more frequent. The relative percent difference (RPD) between duplicate measurements should be ≤ 25%. If this level of precision is not achieved, all sample analyses will cease until the source of the discrepancy is identified and eliminated.

6.7.3 Equipment

In general, temperature measurement instrumentation, ovens, and balances are calibrated with thermometers and weights traceable to the National Institute for Standards and Technology (NIST). Constant attention to details is necessary to assure that short-term shifts in the grain size distribution are not confused with faulty or flawed procedures. To minimize errors, strict adherence is made not only to standard laboratory practices, but equipment as well. Pipettes are acid washed and recalibrated quarterly; screens are checked for tears or holes twice weekly; balance is calibrated daily; and oven temperature is checked daily.

6.8 Reporting

6.8.1 Reporting Units

The laboratory and client sample ID's, particle size distribution (phi), mean grain size, silt-clay fraction, coarse fraction, skewness, kurtosis, and sorting are reported for each sample in Excel format.

6.8.2 Duplicate Analysis

All duplicates are reported. Duplicates are analyzed with every 20 field samples or one per batch, whichever is more frequent.

APPLIED MARINE SCIENCES, INC.
Standard Operating Procedures AMS-9504
Prepared By: Kenneth S. Davis

DETERMINING THE BULK DENSITY OF SOIL SAMPLES

1.0 INTRODUCTION

This Standard Operating Procedure (SOP) describes the determination of the bulk density of soil. The bulk density of soil is expressed as its weight per unit volume.

2.0 APPLICATION

This procedure applies to all field and laboratory based activities involving the analysis of soil for bulk density.

3.0 REFERENCE

USACE EM 1110-2-1906 Laboratory Soils Testing.

4.0 SAMPLE COLLECTION, PRESERVATION, STORAGE, AND HOLDING TIMES

4.1 Sample Collection

Sediment samples are collected in the field according to project specific sampling Quality Assurance/Project Protocols. After collection, sediment samples are shipped at 4°C to the laboratory.

4.2 Sample Storage

Samples that will be analyzed for bulk density analysis are stored in either plastic or glass containers. The samples are maintained at 4°C but never frozen prior to analysis.

4.3 Sample Holding Time

Samples stored by refrigeration have holding times of not more than six months.

5.0 APPARATUS AND MATERIALS

This procedure requires the following equipment:

1. Spatula
2. Volumetric mold with o-ring sealed plunger
3. Analytical balance (accurate to 0.1 mg)
4. Drying dish
5. Drying oven maintained at 105°C (±5°C)

6.0 PROCEDURE

6.1 Sample Receipt

6.1.1. Upon receipt of the sample from the client, individual sample identity (ID) numbers are checked against Chain-of-Custody forms.

6.1.2. Data sheets are filled out with Client Name, Project Number, Date Received, and Lab Sample ID.

6.1.3. Samples are refrigerated at 4°C until analysis.

6.2 Sample Analysis

6.2.1. Mix the wet soil sample thoroughly in its original container or transfer to a suitably large container to enable good homogeneous blending.

6.2.2. Using a spatula, transfer the soil mixture to the volumetric mold, compressing the soil lightly to avoid retaining air pockets within the soil.

6.2.3. Carefully trim any excess soil from the top of the volumetric mold.

6.2.4. Extrude the soil sample from the volumetric mold into a clean, preweighed dish.

6.2.5. Weigh the wet soil sample to the nearest 0.1 mg.

6.2.6. Place soil sample and dish in drying oven at 105°C for at least 24 hours.

6.2.7. Remove the soil sample from the drying oven and place in desiccator until cool.

6.2.8. Weigh to the nearest 0.1 mg.

7.0 CALCULATIONS

Calculate the bulk density of the soil as follows:

Wet Unit Weight (g/cm^3) = wet mass of soil (grams)/volume of plugger (cm^3)

Dry Unit Weight (g/cm^3) = dry mass of soil (grams)/volume of plugger (cm^3)

8.0 QUALITY CONTROL

8.1 Replicate Analyses

Quality control procedures to be incorporated into the determination of soil bulk density includes analysis of a duplicate sample with every batch of 10 samples, or with every sample set, whichever is more frequent. The relative percent difference (RPD) between the duplicate measurements should be ≤ 25%. If this level of precision is not achieved, all sample analyses will cease until the source of the discrepancy is identified and eliminated.

8.2 Reporting

8.2.1 Reporting Units

Reporting units are in g/cm^3

8.2.2 Replicate Analyses

All replicates are reported. Replicates are analyzed with every 10 field samples, or one per batch whichever is more frequent.

DETERMINATION OF ATTERBERG LIMITS: LIQUID LIMIT, PLASTIC LIMIT, AND PLASTICITY INDEX OF SOILS

Written By: AMS
Date:

1.0 INTRODUCTION

1.1 This test method covers the determination of the liquid limit, plastic limit, and the plasticity index of soils as defined in Section 4.0.

1.2 Two procedures for preparing test specimens and two procedures for performing the liquid limit are provided as follows:

A) Multipoint test using a wet preparation procedure, described in Sections 8.1.1, 8.2, and 8.3

B) Multipoint test using a dry preparation procedure, described in Sections 8.1.7, 8.2, and 8.3

C) One-point test using a wet preparation procedure, described in Sections 9.1, 9.2, and 9.3

D) One-point test using a dry preparation procedure, described in Sections 9.1, 9.2, and 9.3

The procedure to be used shall be specified by the requesting authority. For the Palos Verdes Pilot Capping Monitoring Program, Procedure A shall be used.

1.3 As used in this test method soil is any natural aggregation of mineral or organic materials, mixtures of such materials or artificial mixtures of aggregates and natural mineral or organic particles.

1.4 The correlations on which the calculations from the one-point procedure are based may not be valid for certain soils, such as organic soils or soils from the marine environment. The liquid limit of these soils should therefore be determined by the multipoint procedure (Procedure A).

1.5 The composition and concentration of soluble salts in a soil affect the values of the liquid and plastic limits as well as the water contents of the soils. Special consideration should therefore be given to soils from a marine environment or other sources where high soluble salt concentrations may be present. The degree to which the salts present in these soils are

diluted or concentrated must be given careful consideration if meaningful results are to be obtained. Precautions to be taken include being careful not to wash any salt away from the sample by, for example, decanting of water.

1.6 Since the tests described herein are performed only on that portion of a soil which passes the 425 µm (No. 40) sieve, the relative contribution of this portion of the soil to the properties of the sample as a whole must be considered when using these tests to evaluate the properties of a soil.

2.0 APPLICATION

2.1 This test method is used as an integral part of several engineering classification systems to characterize the fine-fraction of soils. The liquid limit, plastic limit, and plasticity index of soils are also used extensively, either individually or together with other soil properties to correlate with engineering behavior such as compressibility, permeability, compactibility, shrink-swell, and shear strength.

3.0 REFERENCE

1996, Annual Book of ASTM Standards, Volume 4.08 Soil and Rock; Building Stone. Standard Test Method for Liquid Limit, Plastic Limit, and Plasticity Index of Soils, Test Method D4318.

4.0 DEFINITIONS

4.1 Atterberg Limits-current usage usually refers only to the liquid limit and plastic limit of fine-grained soils.

4.2 Consistency-the relative ease with which a soil can be deformed.

4.3 Liquid Limit (LL)-the water content, in percent, of a soil at the arbitrarily defined boundary between the liquid and plastic states. This water content is defined as the water content at which a pat of soil placed in a standard cup and cut by a groove of standard dimensions will flow together at the base of the groove for a distance of 13 mm (0.5 inch), when subjected to25 shocks from the cup being dropped 10 mm in a standard liquid limit apparatus operated at a rate of 2 shocks per second.

4.4 Plastic Limit (PL)-the water content, in percent, of a soil at the boundary between the plastic and brittle states. The water content at this boundary is the water content at which a soil can no longer be deformed by rolling into 3.2 mm (1/8 in.) diameter threads without crumbling.

4.5 Plastic Soil-a soil which has a range of water content over which it exhibits plasticity and which will retain its shape on drying.

4.6 Plasticity Index (PI)-the range of water content over which a soil behaves plastically. Numerically, it is the difference between the liquid limit and the plastic limit.

5.0 APPARATUS

5.1 Liquid Limit Device-a mechanical device consisting of a brass cup suspended from a carriage designed to control its drop onto a hard rubber base. The device may be operated either by a hand crank or by an electric motor.

5.2 Flat Grooving Tool-a grooving tool made of plastic or metal designed to score the soil pat prior to determining the liquid limit.

5.3 Gauge-a metal gauge block for adjusting the height of drop of the cup.

5.4 Containers-small corrosion-resistant containers with snug-fitting lids for water content specimens.

5.5 Balance-a balance readable to at least 0.01 g and having an accuracy of 0.03 g within three standard deviations within the range of use.

5.6 Storage Container-a container in which to store the prepared soil specimen that will not contaminate the specimen in any way, and which prevents moisture loss.

5.7 Ground Glass Plate-a ground glass plate at least 30 cm (12 in.) square by 1 cm (3/8 in.) thick for mixing soil and rolling plastic limit threads.

5.8 Spatula-a spatula or pill knife having a blade of about 2 cm (3/4 in.) wide by about 10 cm (4 in.) long.

5.9 Sieve-a 20.3 cm (8 in.) diameter, 425 µm (No. 40) sieve having a rim at least 5 cm (2 in.) above the mesh.

5.10 Wash Bottle-wash bottle or similar container for adding controlled amounts of water to soil and washing fines from coarse particles.

5.11 Drying Oven-a thermostatically controlled oven, preferably of the forced-draft type, capable of continuously maintaining a temperature of 110±5°C throughout the drying chamber. The oven shall be equipped with a thermometer of suitable range and accuracy for monitoring oven temperature.

5.12 Washing Pan-a round, flat bottomed pan at least 7.6 cm (3 in.) deep, slightly larger at the bottom than a 20.3 cm (8 in.) diameter sieve.

5.13 Rod (optional)-a metal or plastic rod or tube 3.2 mm (1/8 in.) in diameter and about 10 cm (4 in.) long for judging the size of plastic limit threads.

6.0 SAMPLING CONSIDERATIONS

6.1 Samples which will be prepared using the wet preparation procedure, 8.1.1, must be kept at their natural water content prior to preparation.

6.2 Where data from this test method are to be used for correlation with other laboratory of field test data, use the same material as used for these tests, where possible.

6.3 Obtain a representative portion of the total sample sufficient to provide 150 to 200 g of material passing the 425 µm (No. 40) sieve. Free flowing samples may be reduced by the methods of quartering or splitting. Cohesive samples shall be mixed thoroughly in a pan with a spatula, or scoop and a representative portion scooped from the total mass by making one or more sweeps with a scoop through the mixed mass.

7.0 CALIBRATION OF APPARATUS

7.1 Inspection of Wear:

7.1.1 Liquid Limit Device-determine that all parts of the liquid limit device are clean and in good order. Inspect the base, cup, cup hanger, and cam for excessive wear.

7.1.2 Grooving Tools-inspect grooving tools for wear on a frequent and regular basis. The rapidity of wear depends on the material from which the tool is made and the types of soils being tested. Any tool with a tip width greater than 2.1 mm must not be used. The depth of the grooving tool must be 7.9 to 8.1 mm.

7.1.3 Adjustment of Height of Drop-adjust the height of drop of the cup so that the point on the cup that comes in contact with the base rises to a height of 10±0.2 mm.

7.2 In general, temperature measurement instrumentation, ovens, and balances are calibrated with thermometers and weights traceable to the National Institute for Standards and Technology (NIST).

8.0 MULTIPOINT LIQUID LIMIT-PROCEDURES A AND B

8.1 Preparation of Test Specimens

8.1.1 Wet Preparation-except where the dry method of specimen preparation is specified (8.1.7), prepare specimens for test as described in the following sections.

8.1.2 Samples passing the 425 µm (No. 40) sieve-when by visual and manual procedures it is determined that the sample has little or no material retained on the 425 µm (No. 40) sieve, prepare a specimen of 150 to 200 g by mixing thoroughly with distilled water on the glass plate using the spatula. If desired, soak soil in a storage dish with a small amount of water to soften the soil before mixing. Adjust the water content of the soil to bring it to a consistency that would require 25 to 30 blows of the liquid limit device to close the groove. If, during mixing, a small percentage of the material is encountered that would be retained on a 425 µm (No. 40) sieve, remove these particles by hand, if possible. If it is impractical to remove the coarser material by hand, remove small percentages (less than about 15%) of coarser material by working the specimen through a 425 µm (No. 40) sieve. If larger percentages of coarse material are encountered during mixing, or it is considered impractical to remove the coarser material by the method just described, wash the sample as described in 8.1.3. When the coarse particles found during mixing are concretions, shells, or other fragile particles, do not crush them to make them pass a 425 µm (No. 40) sieve, but remove by hand or by washing. Place the mixed soil in the storage dish, cover to prevent loss of moisture, and allow to stand for at least 16 hours (overnight). After the standing period or immediately before starting the test, thoroughly remix the soil.

8.1.3 Samples containing material retained on a 425 µm (No. 40) sieve-select a sufficient quantity of soil at natural water content to provide 150 to 200 g of material passing the 425 µm (No. 40) sieve. Place in a pan or dish and add sufficient distilled water to cover the soil. Allow to soak until all lumps have softened and the fines no longer adhere to the surface of the coarse particles.

8.1.4 When the sample contains a large percentage of material retained on the 425 µm (No. 40) sieve, perform the following washing operation in increments, washing no more than 0.5 kg of material at one time. Place the 425 µm (No. 40) sieve in the bottom of a clean pan. Pour the soil/water mixture onto the sieve. If gravel or coarse sand particles are present, rinse as many of these as possible with small quantities of water and discard. Alternatively, pour the soil mixture over a 2 mm (No. 10) sieve nested atop the 425 µm (No. 40) sieve, rinse the material through and remove the 2 mm (No. 10) sieve. After washing and removing as much of the coarse material as possible, add sufficient distilled water to the pan to bring the level to about 13 mm (1/2 in.) above the surface of the 425 µm (No. 40) sieve. Agitate the slurry by stirring with the fingers while raising and lowering the sieve in the pan and swirling the suspension so that fine

material is washed from the coarser particles. Disaggregate fine soil lumps that have not slaked by gently rubbing them over the sieve with the fingertips. Complete the washing operation by raising the sieve above the water surface and rinsing the material retained with a small amount of clean distilled water. Discard material retained on the 425 µm (No. 40) sieve.

8.1.5 Reduce the water content of the material retained on the 425 µm (No. 40) sieve until it approaches the liquid limit. Reduction of water content may be accomplished by one or a combination of the following methods: (a) exposing to air currents at ambient room temperature, (b) exposing to warm air currents from a source such as an electric hair drier, (c) filtering in a Buchner funnel, or (d) decanting clear water from the surface of the suspension. During evaporation and cooling, stir the sample to prevent overdrying of the fringes and soil pinnacles on the surface of the mixture. For soil samples containing soluble salts, use a method such as (a) or (b) that will not eliminate the soluble salts from the test specimen.

8.1.6 Thoroughly mix the material passing the 425 µm (No. 40) sieve on the glass plate using a spatula. Adjust the water content of the mixture, if necessary, by adding small increments of distilled water or by allowing the mixture to dry at room temperature on the glass plate. The soil should be at a water content that will result in closure of the groove in 25 to 35 blows. Return the mixed soil to the mixing dish, cover to prevent loss of moisture, and allow to stand for at least 16 hours. After the standing period, and immediately before starting the test, remix the soil thoroughly.

8.1.7 Dry Preparation-select sufficient soil to provide 150 to 200 g of material passing the 425 µm (No. 40) sieve after processing. Dry the sample at room temperature or in an oven at a temperature not exceeding 60°C until the solid clods will pulverize readily. Disaggregation is expedited if the sample is not allowed to completely dry. However, the sample should have a dry appearance when pulverized. Pulverize the sample in a mortar with a rubber-tipped pestle or in some way that does not cause the breakdown of individual grains. When the coarse particles found during pulverization are concretions, shells, or other fragile particles, do not crush them to make them pass the 425 µm (No. 40) sieve, but remove by hand.

8.1.8 Separate the sample in a 425 µm (No. 40) sieve, shaking the sieve by hand to assure thorough separation of the finer fraction. Return the material retained on the 425 µm (No. 40) sieve to the pulverizing apparatus and repeat the pulverizing and sieving operation several times to assure that all finer material has been disaggregated and material retained on the 425 µm (No. 40) sieve consists of only individual sand or gravel grains.

8.1.9 Place the material remaining on the 425 µm (No. 40) sieve in a dish and soak in a small amount of distilled water. Stir the soil mixture and pour over the 425 µm (No. 40) sieve, catching the water and any suspended fines in the washing pan. Pour this suspension into a dish containing the dry soil previously sieved through the 425 µm (No. 40) sieve. Discard material retained on the 425 µm (No. 40) sieve.

8.1.10 Adjust the water content as necessary by drying as described in 8.1.5 or by mixing on the glass plate, using a spatula while adding increments of distilled water, until the soil is at a water content that will result in closure of the groove in 25 to 35 blows.

8.1.11 Put soil in the storage dish, cover to prevent loss of moisture and allow to stand for at least 16 hours. After the standing period, and immediately before starting the test, thoroughly remix the soil.

8.2 Procedure

8.2.1 Place a portion of the prepared soil in the cup of the liquid limit device at the point where the cup rests on the base, squeeze it down, and spread it into the cup to a depth of about 10 mm at its deepest point, tapering to form an approximately horizontal surface. Take care to eliminate air bubbles from the soil pat but form the pat with as few strokes as possible. Heap the unused soil on the glass plate and cover with an inverted storage dish or a wet towel.

8.2.2 Form a groove in the soil pat by drawing the grooving tool, beveled edge forward, through the soil on a line joining the highest point to the lowest point on the rim of the cup. When cutting the groove, hold the grooving tool against the surface of the cup and draw in an arc, maintaining the tool perpendicular to the surface of the cup throughout its movement. In soils where a groove cannot be made in one stroke without tearing the soil, cut the groove with several strokes of the grooving tool. Alternatively, cut the groove to slightly less than required with a spatula and use the grooving tool to groove to final dimensions. Exercise extreme care to prevent sliding the soil pat relative to the surface of the cup.

8.2.3 Verify that no soil crumbs are present on the base or underside of the cup. Lift and drop the cup by turning the crank at a rate of 1.9 to 2.1 drops per second until the two halves of the soil pat come in contact at the bottom of the groove along a distance of 13 mm (1/2 in.).

8.2.4 Verify that an air bubble has not caused premature closing of the groove by observing that both sides of the groove have flowed together with approximately the same shape. If a bubble has caused premature closing of the groove, reform the soil in the cup, adding a small amount of soil to make up for that lost in the grooving operation and

repeat 8.2.1 to 8.2.3. If the soil slides on the surface of the cup, repeat 8.2.1 through 8.2.3 at a higher water content. If after several tries at successively higher water contents, the soil pat continues to slide in the cup or if the number of blows required to close is always less than 25, record the liquid limit could not be determined, and report the soil as nonplastic without performing the plastic limit test.

8.2.5 Record the number of drops, N, required to close the groove. Remove a slice of soil approximately the width of the spatula, extending from edge to edge of the soil pat at right angles to the groove and including that portion of the groove in which the soil flowed together, place in a weighed container and cover.

8.2.6 Return the soil remaining in the cup to the glass plate. Wash and dry the cup and grooving tool and reattach the cup to the carriage in preparation for the next trial.

8.2.7 Remix the entire soil specimen on the glass plate adding distilled water to increase the water content of the soil and decrease the number of blows to close the groove. Repeat 8.2.1 through 8.2.6 for at least two additional trials producing successively lower numbers of blows to close the groove. One of the trials shall be for a closure requiring 25 to 35 blows, one for closure between 20 and 30 blows, and one trial for a closure requiring 15 to 25 blows.

8.2.8 Determine the water content, W_N, of the soil specimen from each trial in accordance with the AMS Standard Operating Procedure for ASTM Method D2216 (Laboratory Determination of Moisture Content of Soils). Make all weighings on the same balance. Initial weighings should be performed immediately after completion of the test. If the test is to be interrupted for more than about 15 minutes, the specimens already obtained should be weighed at the time of the interruption.

8.3 Calculations

8.3.1 Plot the relationship between water content, W_N, and the corresponding number of drops, N, of the cup on semilogarithmic graph with the water contents as ordinates on the arithmetic scale, and the number of drops as abscissas on the logarithmic scale. Draw the best straight line through the three plotted points.

8.3.2 Take the water content corresponding to the intersection of the line with the 25-drop abscissa as the liquid limit of the soil. Computational methods may be substituted for the graphical method for fitting a straight line to the data and determining the liquid limit.

9.0 ONE POINT LIQUID LIMIT PROCEDURES C AND D

9.1 Preparation of Test Specimens

9.1.1 Prepare the specimen in the same manner as described in Section 8.1, except that at mixing, adjust the water content to a consistency requiring 20 to 30 drops of the liquid limit cup to close the groove.

9.2 Procedure

9.2.1 Proceed as described in 8.2.2 through 8.2.5 except that the number of blows required to close the groove shall be 20 to 30. If less than 20 or more than 30 blows are required, adjust the water content of the soil and repeat the procedure.

9.2.2 Immediately after removing a water content specimen as described in 8.2.5, reform the soil in the cup, adding a small amount of soil to make up for that lost in the grooving and water content sampling operations. Repeat 8.2.2 through 8.2.5, and, if the second closing of the groove requires the same number of drops of no more than two drops difference, secure another water content specimen. Otherwise, remix the entire specimen and repeat.

9.2.3 Determine the water contents of specimens as described in 8.2.8.

9.3 Calculations

9.3.1 Determine the liquid limit for each water content specimen using one of the following equations:

$$LiquidLimit = W_N \left(\frac{N}{25}\right)^{0.121}$$

or

$$LiquidLimit = K(W_N)$$

where:

N = the number of blows causing closure of the groove at water content,
W_N = water content, and
K = a factor given in Table 1.

The liquid limit is the average of the two trial liquid limit values.

9.3.2 If the difference between the two trial liquid limit values is greater than one percentage point, repeat the test.

10.0 PLASTIC LIMIT

10.1 Preparation of Test Specimen

10.1.1 Select a 20-g portion of soil from the material prepared for the liquid limit test, either after the second mixing before the test, or from the soil remaining after completion of the test. Reduce the water content of the soil to a consistency at which it can be rolled without sticking to the hands by spreading and mixing continuously on the ground glass plate. The drying process may be accelerated by exposing the soil to the air current from an electric fan or by blotting with paper that does not add any fiber to the soil, such as a hard surface paper toweling or high wet strength filter paper.

10.2 Procedure

10.2.1 From the 20-g mass, select a portion of 1.5 to 2.0 g. Form the test specimen into an ellipsoidal mass. Roll this mass between the palm or fingers and the ground glass plate with just sufficient pressure to roll the mass into a thread of uniform diameter throughout its length. The thread shall be further deformed on each stroke so that its diameter is continuously reduced and its length extended until the diameter reaches 3.2±0.5 mm (0.125±0.20 in.), taking no more than 2 minutes. The amount of hand or finger pressure required will vary greatly, according to the soil. Fragile soils of low plasticity are best rolled under the outer edge of the palm or at the base of the thumb.

10.2.2 Gather the portions of the crumbled thread together and place in a weighed container. Immediately cover the container.

10.2.3 Select another 1.5 to 2.0 g portion of soil from the original 20-g specimen and repeat the operations described in 10.2.1 and 10.2.2 until the container has at least 9 g of soil.

10.2.4 Repeat 10.2.1 through 10.2.3 to make another container holding at least 9 g of soil. Determine the water content, in percent, of the soil contained in the containers in accordance with the AMS Standard Operation Procedure for ASTM Method D2216 (Laboratory Determination of Moisture Content of Soil Samples). Make all weighings on the same balance.

10.3 Calculations

10.3.1 Compute the average of the two water contents. If the difference between the two water contents is greater than two percentage points, repeat the test. The plastic limit is the average of the two water contents.

11.0 PLASTICITY INDEX

11.1 Calculations

11.1.1 Calculate the Plasticity Index as follows:

$$PI = LL - PL$$

where:
LL = the liquid limit,
PL = the plastic limit.

Both LL and PL are whole numbers. If either the liquid limit or the plastic limit could not be determined, or if the plastic limit is equal to or greater than the liquid limit, report the soil as nonplastic, NP.

11.2 Reporting

11.2.1 Sample identifying information.

11.2.2 Any special specimen selection process used.

11.2.3 Liquid limit, plastic limit, and plasticity index to the nearest whole number and omitting the percent designation. If the liquid limit or plastic limit could not be performed, or if the plastic limit is equal to or greater than the liquid limit, report the soil as nonplastic, NP.

11.2.4 An estimate of the percentage of sample retained on the 425 µm (No. 40) sieve.

11.2.5 Procedure by which liquid limit was performed.

Table 1
Factors for Obtaining Liquid Limit from Water Content
and Number of Drops Causing Closure of Groove

N (Number of Drops)	K (Factor for Liquid Limit)
20	0.974
21	0.979
22	0.985
23	0.990
24	0.995
25	1.000
26	1.005
27	1.009
28	1.014
29	1.018
30	1.022

APPLIED MARINE SCIENCES, INC.
Standard Operating Procedures AMS-D2216
Prepared By: Kenneth S. Davis

LABORATORY DETERMINATION OF MOISTURE CONTENT OF SOILS

1.0 SCOPE

This procedure describes the laboratory determination of the moisture content of soils. The moisture content of a material is defined as the ratio, expressed as a percentage, of the mass of "pore" or "free" water in a given mass of material to the mass of the solid particles.

2.0 REFERENCE

1996 Annual Book of ASTM Standards, Volume 4.08 Soil and Rock; Building Stone. Standard Test Method for Laboratory Determination of Water (Moisture) Content of Soil, Rock, and Soil-Aggregate Mixtures, Test Method D2216.

3.0 APPARATUS

3.1 Drying Oven, thermostatically-controlled, preferably of the forced-draft type, and maintaining a uniform temperature of 110±5°C throughout the drying chamber.

3.2 Balance, having a precision of ±0.01 g for specimens having a mass of 200 g or less, ±0.1 g for specimens having a mass between 200 and 1000 g, or ±1 g for specimens having a mass greater than 1000 g.

3.3 Specimen containers, suitable containers made of material resistant to corrosion and a change in mass upon repeated heating, cooling, and cleaning.

3.4 Desiccator, a desiccator of suitable size containing a hydrous silica gel.

4.0 SAMPLES

Prior to testing, samples should be stored in noncorrodible airtight containers at a temperature

between approximately 3 and 30°C and in an area that prevents direct contact with sunlight. The moisture content determination should be done as soon as practicable after sampling.

5.0 PROCEDURE

5.1 Place the moist specimen in a clean, dry container of known mass, and determine the mass of the container and moist material using the appropriate balance. Record these values.

5.2 Place the container with moist material in a drying oven maintained at 110±5°C and dry to a constant mass.

5.3 After the material has dried to a constant mass, remove the container from the oven and store in desiccator. Allow the material and container to cool to room temperature or until the container can be handled comfortably with bare hands and the operation of the balance will not be affected by convection currents. Determine the mass of the container and oven-dried material using the same balance as used in 5.1. Record this value.

6.0 CALCULATION

Calculate the water content of the material as follows:

$$w = [(W_1-W_2)/(W_2-W_c)] * 100$$

where:
w = water content, %
W_1 = mass of container and moist specimen, g
W_2 = mass of container and oven-dried specimen, g
W_c = mass of container, g

7.0 REPORT

The report shall include the following: sample identification, moisture content to the nearest 0.1%, and indication of any material excluded from test specimen.

8.0 PRECISION AND ACCURACY

Requirements for the precision and accuracy of this test method have not yet been developed. However, AMS has arbitrarily set precision at 25% relative percent difference.

DETERMINING THE SPECIFIC GRAVITY OF SOIL SAMPLES

1.0 INTRODUCTION

This Standard Operating Procedure (SOP) describes the determination of the specific gravity of soil by means of a pycnometer. Specific gravity is the ratio of the mass of a unit volume of a material at a stated temperature to the mass in air of gas-free distilled water at a stated temperature. Thus, the results of the specific gravity analyses are reported as a ratio and have no units.

2.0 REFERENCE

ASTM Method D854-83, 1984. Standard Test Method for Specific Gravity of Soils, Annual Book of Standards, American Society of Testing and Materials, Section 4, Volume 04.08, pp. 211-214.

3.0 SAMPLE COLLECTION, PRESERVATION, STORAGE, AND HOLDING TIMES

3.1 Sample Collection

Sediment samples are collected in the field according to project specific sampling Quality Assurance/Project Protocols. After collection, sediment samples are shipped at 4EC to the laboratory.

3.2 Sample Storage

Samples that will be analyzed for specific gravity should be stored in either plastic or glass containers. The samples should be maintained at 4EC but never frozen prior to analysis. No chemical preservatives are required.

3.3 Sample Holding Time

Samples stored by refrigeration have holding times of not more than six months.

4.0 APPARATUS AND MATERIALS

This procedure requires the following equipment:

1. Pycnometer-100 ml volumetric flask with glass stopper
2. Analytical balance (accurate to 0.1 mg)
3. Drying dish
4. Drying oven maintained at 105EC ("5EC)

5. Mortar and Pestle
6. Thermometer
7. De-aired distilled water

5.0 PROCEDURE

5.1 Sample Receipt

5.1.1 When samples are received from a client, individual sample identity (ID) numbers are checked against Chain-of-Custody forms.

5.1.2 Data sheets are filled out with Client Name, Project Number, Date Received, and Lab Sample ID.

5.1.3 Samples are refrigerated at 4EC until analysis.

5.2 Pycnometer Preparation

5.2.1 The pycnometer should be clean, dried, and weighed. Record weight.

5.2.2 Fill the pycnometer with de-aired distilled water and weigh (Wa).

5.2.3 Record the temperature (Tx), of the de-aired distilled water.

5.3 Sample Analysis

5.3.1 Mix the wet soil sample thoroughly in its original container or transfer to a suitably large container to enable good homogeneous blending.

5.3.2 Transfer a sufficient quantity of wet soil to a drying dish.

5.3.3 Place soil sample and dish in drying oven at 105EC until dry.

5.3.4 Remove the soil sample from the drying oven and place in a desiccator until cool.

5.3.5 Disaggregate the dried sample lightly using a mortar and pestle.

5.3.6 Weigh ca. 25 g of dry soil to the nearest 0.1 mg, record weight (Wo).

5.3.7 Soak the soil in de-aired distilled water for at least 12 hours.

5.3.8 Transfer the sample to a pycnometer, taking care not to lose any of the soil.

5.3.9 Fill the pycnometer with de-aired distilled water, dry the outside with a dry, clean cloth.

5.3.10 Weigh the pycnometer and contents (Wb), and record the temperature in degrees Celsius (Tx).

6.0 CALCULATIONS

Calculate the specific gravity of the soil as follows:

$$\text{Specific Gravity, } Tx/Tx = Wo/[Wo + (Wa-Wb)]$$

where:

Wo = weight of the oven-dry soil, g
Wa = weight of pycnometer filled with water at temperature Tx, g
Wb = weight of pycnometer filled with water and soil at temperature Tx, g
Tx = temperature of the contents of the pycnometer when weight Wb was determined, °C

7.0 QUALITY CONTROL

7.1 Replicate Analyses

Quality control procedures to be incorporated into the determination of soil specific gravity includes analysis of a replicate sample with every batch of 20 samples, or with every sample set, whichever is more frequent. The results of the replicate analyses should be #25% RPD.

7.2 Reporting

7.2.1 Reporting Units

Typically, specific gravity values should be reported based on water at 20°C. The value based on water at 20°C shall be calculated from the value based on water at the observed temperature, Tx, as follows:

$$\text{Specific Gravity, } Tx/20°C = K * \text{specific gravity, } Tx/Tx$$

where:

K = a number found by dividing the relative density of water at temperature Tx by the relative density of water at 20°C. Values for a range of temperatures are provided in Table 1.

7.2.2 Replicate Analyses

All replicates are reported. Replicates are analyzed with every 20 field samples, or one per batch whichever is more frequent.

Table 1. Relative Density of Water and Conversion Factor K for Various Temperatures

Temperature °C	Relative Density Of Water	Correction Factor K
18	0.9986244	1.0004
19	0.9984347	1.0002
20	0.9982343	1.0000
21	0.9980233	0.9998
22	0.9978019	0.9996
23	0.9975702	0.9993
24	0.9973286	0.9991
25	0.9970770	0.9989
26	0.9968156	0.9986
27	0.9965451	0.9983
28	0.9962652	0.9980

Summary of Standard Operating Procedures for Analysis of 4,4'-DDE in Palos Verdes Shelf Sediments by Woods Hole Group Environmental Laboratories DRAFT Revision 2.0 July 24, 2000

This summary explains the combination of standard operating procedures (SOPs) and any modifications therein that are to be used by Woods Hole Group Environmental Laboratories (WHG) for analyzing sediments from the Palos Verdes Shelf for 4,4'-DDE. This summary is presented as a working protocol with a numbered sequence of steps. It is subject to review by Science Applications International Corporation and the U.S. Army Corps of Engineers.

Sample Receipt

1. Samples received by WHG will be inspected and logged for analysis after measurement of cooler temperature. Samples will be transferred to a freezer at -10° to -20°C for frozen storage as soon as practically possible following receipt. Freezing of the samples for up to one year is an acceptable preservation technique, as documented in the Project-specified Quality Assurance Project Plan prepared by SAIC. Samples should be aliquoted for determination of percent solids and for screening prior to freezer storage. Procedures are described in WHG *Sample Management Standard Operating Procedure (Revision 4)*.

Sample Screening

1. Aliquot 1 g of each sample into a 40-mL glass vial. Add approximately 1 g of a drying agent (diatomaceous earth) and 10 mL hexane. Mix the sample in hexane by shaking for 5 min.

2. Allow sample/solvent mix to settle for 30 min. and aliquot 1 mL of the hexane extract into a GC vial.

3. Analyze by GC/MS using procedures in WHG SOP for Method 8270C, modified as follows: a) calibrate with two calibration standards for 4,4'-DDE using a selected ion monitoring acquisition method that includes the base peak and at least two other ions for 4,4'-DDE, b) screen extracts using the same SIM method developed for the calibration, c) run screens without applicable tuning or CCV procedures.

4. Report screening measurements to the GC supervisor, who will indicate surrogate spike amounts for extraction of each sample assuming 10 g extracted. The GC supervisor will also estimate the approximate extract final volume necessary for a 10-g extract of each sample to provide 4,4'-DDE response within the GC-ECD calibration range (1 ng/mL to 200 ng/mL calibration solution concentrations).

Sample Analysis

1. Aliquot approximately 10 g wet weight of each sample, spike with the amount of surrogate compounds tetrachloro-meta-xylene (TCmX) and decachlorobiphenyl (DCB) indicated by the GC supervisor following the screening analysis.

2. Extract samples following procedures for sonication (Method 3550B) described in Section 7.4 of WHG SOP *Method 8081A Organochlorine Pesticides by Gas Chromatography/ Electron Capture Detection (Revision 0)*.

3. Extract up to 20 field samples with the following batch quality control (QC) samples: 1 method blank, 1 spiked method blank, 1 matrix spike/matrix spike duplicate pair, 1 regional reference material (provided to WHG through SAIC), and 1 standard reference material (SRM 1944) as requested by SAIC.

4. Exchange methylene chloride extracts into hexane and clean with activated copper following procedures in WHG SOP *Method 3660B Sulfur Cleanup (Revision 1.0)*.

5. Adjust "neat extracts" to a measured volume of 10.0 mL in hexane. **Note:** At a nominal extract volume of 10 mL, which when coupled with a 10-g sample wet weight provides a nominal wet-weight reporting limit of 1 ug/Kg, further extract cleanups will not likely be necessary. Use the first extraction batch as an indication of whether cleanups may be necessary.

6. If further extract cleanup appears necessary, an aliquot of the extract in hexane may be cleaned through amino-propyl gel following procedures in WHG SOP *Amino-Propyl Cleanup of Tissues and Sediments (Revision 0)*. If further cleanup appears necessary, gel permeation chromatography may be employed on methylene chloride extracts following automated high-performance liquid chromatography procedures in WHG SOP *Gel Permeation Chromatography (Revision 0)*.

7. Submit 1 mL of extracts to GC laboratory for any dilutions and analysis by GC/ECD following procedures in WHG SOP *Method 8081A Organochlorine Pesticides by Gas Chromatography/Electron Capture Detection (Revision 0)*.

8. Implement the following modifications to the SOP cited in step 7:

- Use only Rtx-5 and Restek CLPesticide II columns for the dual-column analysis
- Evaluate all initial calibrations using the linear calibration criterion and use average relative response factors for analyte quantification (calibrate for 4,4'-DDE, 4,4'-DDD, 4,4'-DDT, TCmX and DCB). Note: only results for 4,4'-DDE ultimately will be reported; other DDT isomers are being monitored at the laboratory for internal QA/QC purposes.
- Use a 15% D acceptance criterion for CCVs
- Evaluate and report MS/MSD recoveries for 4,4'-DDE, 4,4'-DDD, and 4,4'-DDT; quantify all three only in the native sample associated with the MS/MSD
- Report recoveries for both surrogates, but DO NOT adjust 4,4'-DDE measurements for surrogate recovery

9. Any initial dilutions of the 10.0-mL "neat extracts" will be performed using a gas-tight syringe by the GC analyst setting up the analysis run. Sample chromatograms with 4,4'-DDE response falling outside the calibration response range for either the primary or confirmatory column will require reanalysis at an adjusted dilution.

10. Report any batch or matrix QC noncompliance to the Laboratory Project Manager prior to implementing corrective action. Instrument QC noncompliance should be addressed by the analyst in consultation with the GC supervisor and corrective action implemented without need for notification of the Laboratory Project Manager.

Confirmatory Analysis

1. The Laboratory Project Manager, in consultation with SAIC, will select 10% of the samples to be confirmed for identification and quantification of 4,4'-DDE by GC/MS-SIM following instrumental procedures in SOP *Analysis of Polynuclear Aromatic Hydrocarbons by Gas Chromatography/Mass Spectrometry with Selected Ion Monitoring (Revision 1.0)*. The following two criteria will be used for selection of the samples for confirmation: 1) the concentration of p,p'-DDE in the sample, as determined originally by GC/ECD, should be greater than 200 ug/kg dry weight, and 2) at least one sample from each GC/ECD extraction batch should be selected.

2. The GC/MS-SIM SOP will be modified to target 4,4'-DDE and the surrogate compounds TCmX and DCB, and the internal standard from the GC-ECD analysis. Each compound will be represented in the SIM acquisition by no fewer than two and no more than three ions. SOP criteria for initial calibration will follow SOP limits for linear calibration with average relative response factors and %D $\leq$ 15% for CCVs. DDT breakdown will not be monitored for the confirmatory analysis because the purpose of this analysis is only to confirm the GC-ECD results (i.e., the GC/MS-SIM results will not be used for any project reporting or assessment purposes). Furthermore, the continuing calibration check (CCV) associated with the confirmatory analysis will provide an indication of DDT breakdown.

3. Analyze the associated batch QC samples (method blank and spiked blank) for each sample set. Matrix batch QC (MS/MSD, RRM, SRM) will not be confirmed.

4. Confirmation analyses from multiple (approximately five) extraction batches will be combined into each GC/MS analysis run; these will be reported in a single data package.

5. Confirmatory acceptance criteria will be specified in the QAPjP; confirmatory analysis results will be reported to SAIC to support data validation. Corrective actions will be limited to GC/MS corrective actions specified for QC noncompliance in the SOP. GC/MS results will not be used to trigger corrective actions for GC-ECD analyses.

Summary of Standard Operating Procedures for Analysis of 4,4'-DDE in Palos Verdes Shelf Seawater by Woods Hole Group Environmental Laboratories DRAFT Revision 1.0 July 7, 2000

This summary explains the combination of standard operating procedures (SOPs) and any modifications therein that are to be used by Woods Hole Group Environmental Laboratories (WHG) for analyzing seawater from the Palos Verdes Shelf for 4,4'-DDE. This summary is presented as a working protocol with a numbered sequence of steps. It is subject to review by Science Applications International Corporation and the U.S. Army Corps of Engineers.

Sample Receipt

1. Samples received by WHG will be inspected and logged for analysis after measurement of cooler temperature. Samples will be transferred to a refrigerator at 2° to 6°C for storage as soon as practically possible following receipt. Procedures are described in WHG *Sample Management Standard Operating Procedure (Revision 4)*.

Sample Screening

Because 4,4'-DDE concentrations in seawater are expected to fall within the calibration range for Method 8081A as applied to this project, samples will not be screened.

Sample Analysis

1. Transfer the contents of the sample container (1-L or 2-L amber glass bottle) to a separatory funnel and spike the sample with the surrogate compounds tetrachloro-meta-xylene (TCmX) and decachlorobiphenyl (DCB).

2. Extract samples following procedures described in WHG SOP *Method 3510C Extraction of Water Samples by Separatory Funnel (Revision 1.0)*.

3. Extract up to 20 field samples with the following batch quality control (QC) samples: 1 method blank, 1 spiked method blank, and matrix spike/matrix spike duplicate pair.

4. Exchange extracts into hexane and adjust "neat extracts" to a measured volume of 0.500 mL for "plume" samples, and 0.250 mL for "background" or "reference" station samples. **Note:** A nominal extract volume of 0.500 mL coupled with a 1-L sample volume provides a nominal reporting limit of 0.50 ng/L for 4,4'-DDE.

5. If extract cleanup appears necessary, an aliquot of the extract in hexane may be cleaned through amino-propyl gel following procedures in WHG SOP *Amino-Propyl Cleanup of Tissues and Sediments (Revision 0)*.

6. Submit extracts to GC laboratory for analysis by GC/ECD following procedures in WHG SOP *Method 8081A Organochlorine Pesticides by Gas Chromatography/Electron Capture Detection (Revision 0)*.

7. Implement the following modifications to the SOP cited in step 7:

- Use only Rtx-5 and Restek CLPesticide II columns for the dual-column analysis. Initial evaluation of the CLPesticide II column versus Rtx-1701 indicated fewer potential co-elutions of DDT pesticides and PCB congeners on the CLPesticide II column than the Rtx-1701 under our GC operating conditions.
- Evaluate all initial calibrations using the linear calibration criterion and use average relative response factors for analyte quantification (calibrate for 4,4'-DDE, 4,4'-DDD, 4,4'-DDT, TCmX and DCB)
- Use a 15% D acceptance criterion for CCVs
- Evaluate and report MS/MSD recoveries for 4,4'-DDE, 4,4'-DDD, and 4,4'-DDT; quantify all three only in the native sample associated with the MS/MSD
- Report recoveries for both surrogates, but DO NOT adjust 4,4'-DDE measurements for surrogate recovery

8. Any initial dilutions of the "neat extracts" will be performed using a gas-tight syringe by the GC analyst setting up the analysis run. Sample chromatograms with 4,4'-DDE response falling outside the calibration response range for either the primary or confirmatory column will require reanalysis at an adjusted dilution.

9. Report any batch or matrix QC noncompliance to the Laboratory Project Manager prior to implementing corrective action. Instrument QC noncompliance should be addressed by the analyst in consultation with the GC supervisor and corrective action implemented without need for notification of the Laboratory Project Manager.

Confirmatory Analysis

1. The Laboratory Project Manager, in consultation with SAIC, will select 10% of the samples to be confirmed for identification and quantification of 4,4'-DDE by GC/MS-SIM following instrumental procedures in SOP *Analysis of Polynuclear Aromatic Hydrocarbons by Gas Chromatography/Mass Spectrometry with Selected Ion Monitoring (Revision 1.0)*. If possible, samples with GC-ECD measured concentrations of 4,4'-DDE of 100 ng/L or greater will be selected for GC/MS confirmation to assure adequate instrument sensitivity. In addition, at least one sample from each GC-ECD extraction batch will be selected for confirmation.

2. The GC/MS-SIM SOP will be modified to target 4,4'-DDE and the surrogate compounds TCmX and DCB, and the internal standard from the GC-ECD analysis. Each compound will be represented in the SIM acquisition by no fewer than two and no more than three ions. SOP criteria for initial calibration will follow SOP limits for linear calibration with average relative response factors and %D $\leq$ 15% for CCVs. DDT breakdown will not be monitored for the confirmatory analysis.

3. Analyze the associated batch QC samples (method blank and spiked blank) for each sample set. Matrix batch QC (MS/MSD, RRM, SRM) will not be confirmed.

4. Confirmation analyses from multiple (approximately five) extraction batches will be combined into each GC/MS analysis run; these will be reported in a single data package.

5. The goal for GC/MS confirmation is a positive identification and ≤50%D between the GC-ECD and GC/MS quantifications. Failure to meet this target goal will trigger review of the GC-ECD and GC/MS analyses for possible measurement bias. Confirmatory analysis results will be reported to SAIC to support data validation; GC/MS quantifications that do not meet the 50%D goal will be flagged with a qualifier. Other than described herein, corrective actions will be limited to GC/MS corrective actions specified for QC noncompliance in the SOP. GC/MS results will not be used to trigger corrective actions for GC-ECD analyses.